UD TRUCKS

Croner

PKE250

H29

VEHICLE		H29
Model		PKE 250
Manufacturers Code		PKE42RGVW17
Model Description		4×2 Freight Carrier
MASS		
Tare – total (T) *	kg	5 520
Tare Frt / Rr	kg	3 280/2 240
GVM	kg	16 000
V	kg	15 500
GCM	kg	24 500
D/T	kg	24 500
Axle – front GA/GAU	kg	6 500
Axle – front A/AU	kg	6 500
Axle – rear GA/GAU	kg	11 000
Axle – rear A/AU	kg	9 000
* Tools included in tare		Yes
PERFORMANCE		
Gradeability at V	%	42.7
Gradeability at D/T	%	26.8
Max. geared road speed	km/h	100
MAJOR DIMENSIONS		
Overall length	mm	9 397
Overall width	mm	2 486
Wheelbase	mm	5 500
CA – cab to rear axle	mm	4 750
ROH – Centre of rear axle to end of frame	mm	2 545
Turning radius (curb to curb)	mm	9 775
ENGINE		
Model		GH8E
Capacity	cm^3	7 700
Layout		In line six cylinder
Type		Turbo Intercooled (Common Rail)
Power at r/min	Kw	184 @ 2 200
Torque at r/min	Nm	950 @ 1 100-1 700
Emissions standard		EUR III
Protection		Standard
TRANSMISSION		
Model		ST1006
Type		Synchro
Shift		Manual
No. of gears forward		6
First gear ratio		8.71
Top gear ratio		1
Transmission PTO		Prepared for PTO fitment

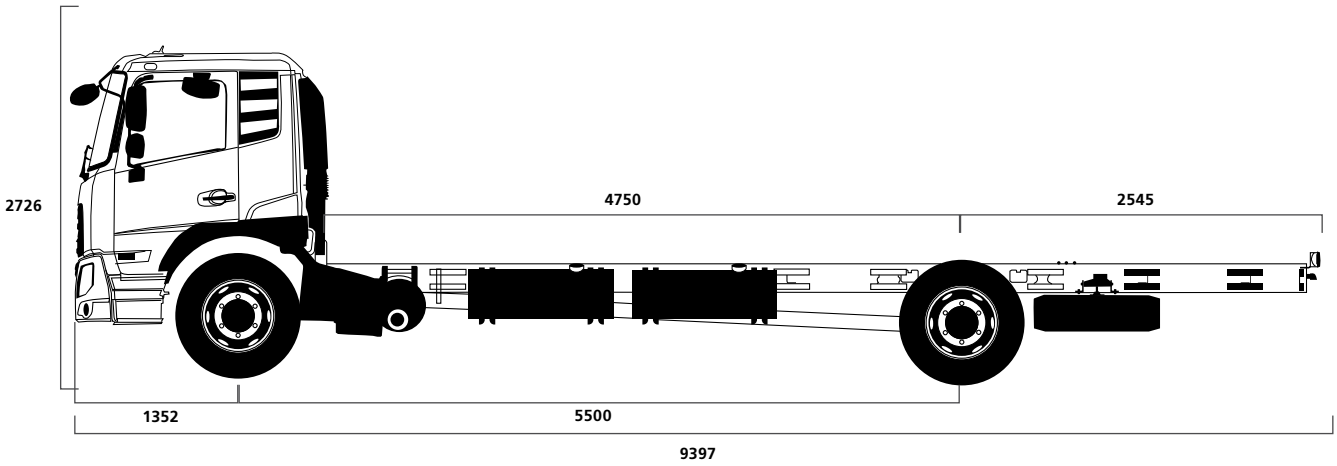

CLUTCH		
Model		Organic
Type		Dry Single plate
Diameter	mm	395
Operation		Air assisted hydraulically operated
DRIVE AXLE		
Model		RSS1132B
Reduction type		Single Reduction Single
Final ratio		4.33
SUSPENSION		
Front		Multileaf Spring
Rear		Multileaf Spring
Shock absorbers		Standard-(Double Acting front & Rear)
Stabilisers		Standard
STEERING		
Operation		Power assisted
Steering Wheel Tilt & Telescopic		Standard
BRAKES		
System type		Full air
Front		S-cam Drum Brake
Rear		S-cam Drum Brake
Electronic brake system		ABS
Park/emergency system		Spring brakes-rear
Exhaust brake		Standard
ELECTRICAL AND FUEL		
Fuel tank 1 capacity	ltrs	315
Fuel tank 2 capacity	ltrs	None
TYRES		
Size – front		295/80R22.5
Size – rear		295/80R22.5
CAB		
Type		Sleeper Cab (Without cab back mattress)
No. of bunks		1
No. of seats		3(Includes Center Seat)
Window lift		Mechanical/Manual
Seat Belts		Standard-ELR with Reminder (Lap Belt with center Seat)
Seats		Fully adjustable, with Fire Retardant Material
Air conditioning		Standard
Radio/USB		Without
On-board computer		Multi Function Display & In Vehicle Diagnostics
Tilt cab		Mechanical
Speed limiter	km/h	80
Day Time Running Lights		Without
Rear View Mirrors		6 total (Front and LHS close proximity, rear and wide angle RHS & LHS)
12 Volt Power Outlet		Standard in Dash
Overhead Storage Console		Without
Driver Fuel Coaching Tool		Standard in Multi Function Display
Telematics Communication Gateway		Without telematics gateway

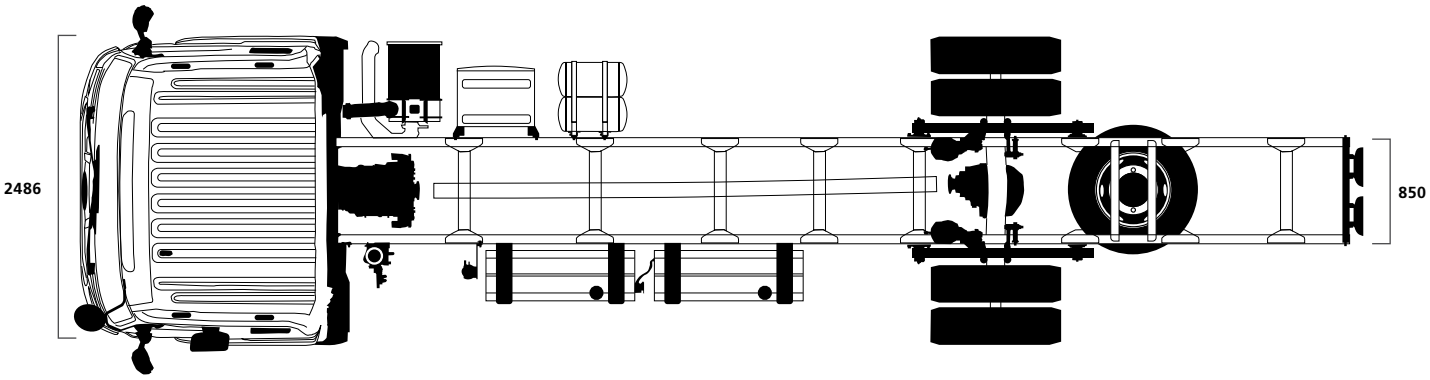

Specifications and options may differ depending on each country due to regulations or special requirements.
Dimensions and devices may be changed without prior notice. Please contact your nearest UD Trucks dealer for further details.