UD TRUCKS

Kuzer

RKE150

(M04)

VEHICLE		M04
Model		RKE150
Manufacturers Code		RKE42R04MS
Model Description		4×2 Freight carrier
MASS		
Tare – total (T) *	kg	3 230
Tare Frt / Rr	kg	2 150/1 080
GVM	kg	8 999
V	kg	8 999
GCM	kg	10 000
D/T	kg	10 000
Axle – front GA/GAU	kg	3 200
Axle – front A/AU	kg	3 200
Axle – rear GA/GAU	kg	6 200
Axle – rear A/AU	kg	6 200
* Included in tare		Yes
PERFORMANCE		
Gradeability at V	%	32.3
Gradeability at D/T	%	29.1
Max. geared road speed	km/h	111
MAJOR DIMENSIONS		
Overall length	mm	7 153
Overall width	mm	2 206
Wheelbase	mm	3 850
CA – cab to bogie/rear axle	mm	3 213
Turning radius (curb to curb) mm	mm	7 000
ENGINE		
Model		GH4E
Capacity	cm^3	3 760
Layout		In line four cylinders
Type		Turbo Intercooled
Power at r/min	kW	112 @ 2800
Torque at r/min	Nm	400 @ 1400 -1800
Emissions standard		EUR II
TRANSMISSION		
Model		ST00506-1
Type		Synchro
Shift		Manual
No. of gears forward		6
First gear ratio		6.38
Top gear ratio		0.77
Transmission PTO		Without

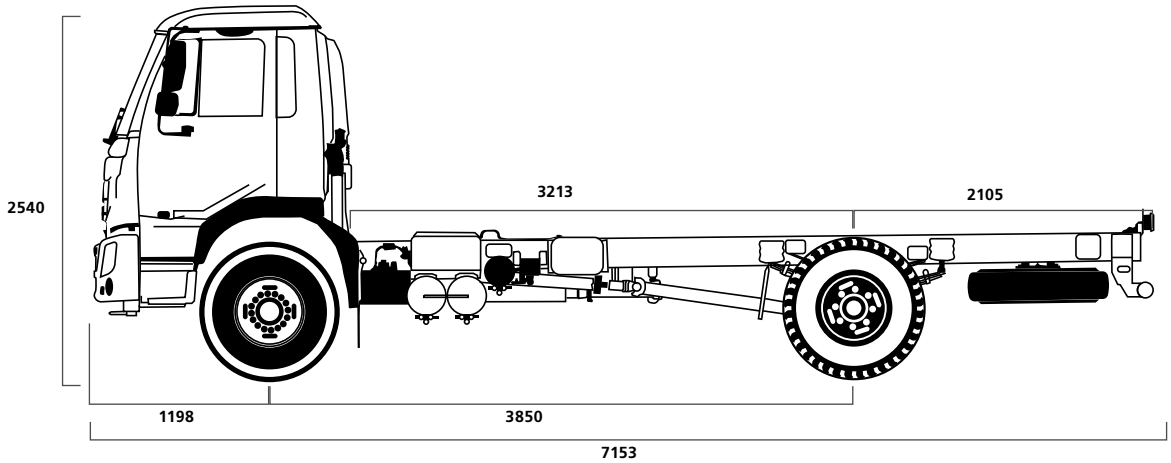

CLUTCH		
Model		Ceramic
Type		Dry single plate
Diameter mm		330
Operation		Air assisted hydraulically operated
DRIVE AXLE		
Model		RSS0610
Reduction type		Single reduction
Final ratio		4.8
SUSPENSION		
Front		Semi elliptical leaf spring
Rear		Semi elliptical leaf spring
Shock absorbers		Double acting-rear and front
Stabilisers		Standard-front
STEERING		
Operation		Power assisted
BRAKES		
System type		Full air
Front		S-cam Drum Brake
Rear		S-cam Drum Brake
Electronic brake system		ABS
Park/emergency system		Spring brakes-rear
Exhaust brake		Standard
ELECTRICAL & FUEL		
Fuel tank 1 capacity	ltrs	180
Fuel tank 2 capacity	ltrs	Without
TYRES		
Size – front		235/75R17.5
Size – rear		235/75R17.5
CAB		
Type		Day cab
No. of seats		3 (Includes Center seat)
Seat belts		Standard-ELR with Reminder (Lap Belt with Centre Seat)
Seats		Fully adjustable
Air conditioning		Standard
Radio/USB		Standard
Cruise control		Standard
On-board computer		Multi display function
Tilt cab		Mechanical
Speed limiter km/h		100
Day time running lights		Without
Rear view mirrors		5 total (LHS proximity,rear and wide angle RHS & LHS)
Driver fuel coaching tool		Standard

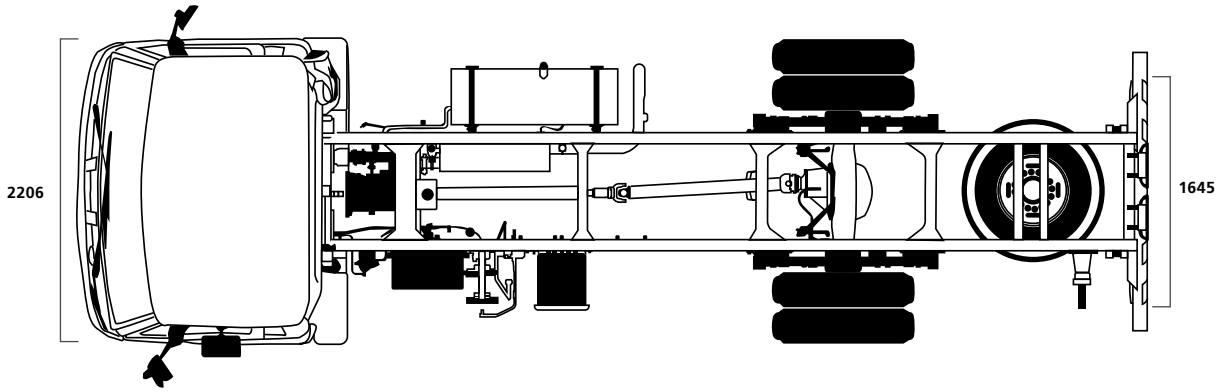

Specifications and options may differ depending on each country due to regulations or special requirements.
Dimensions and devices may be changed without prior notice. Please contact your nearest UD Trucks dealer for further details.