UD TRUCKS

Quon

6X4 FREIGHT CARRIER

CW26 460 – FC

VEHICLE		E72
Model		**CW26 460 - FC**
Manufacturers Code		CWB5CLPPDRA
Model Description		6X4 FREIGHT CARRIER
MASS		
Tare – total (T)*	kg	8 708
Tare Frt / Rr	kg	4 746/3 962
GVM	kg	26 000
V	kg	25 700
GCM	kg	60 000
D/T	kg	56 000
Axle – front GA/GAU	kg	8 200
Axle – front A/AU	kg	7 700
Axle – rear GA/GAU	kg	23 000
Axle – rear A/AU	kg	18 000
*Tools included in tare		YES
*Spare wheel included in tare		YES
*Fifth wheel included in tare		YES
PERFORMANCE		
Gradeability at V	%	84.66%
Gradeability at D/T	%	38.85%
Max. geared road speed	km/h	108.04
MAJOR DIMENSIONS		
Overall length	mm	9 760
Overall width	mm	2 490
Wheelbase	mm	5 285
CA – cab to bogie/rear axle	mm	4 630
Turning radius (curb to curb)	mm	9 600
ENGINE		
Model		GH11E
Capacity	cm^3	10 837
Layout		In line six cylinders
Type		Turbo Intercooled (Unit Injectors)
Power at r/min	kW	346 kW @ 1 800-1 900 rpm
Torque at r/min	Nm	2240 Nm @ 900-1 400 rpm
Emissions standard		Euro V
CLUTCH		
Model		Organic
Type		Dry single plate
Diameter	mm	430
Operation		Automated
TRANSMISSION		
Model		AT612F-ESCOT VI
Type		Non Synchronised
Shift		Automated Transmission
No. of gears forward		12 Speed
First gear ratio		14.941
Top gear ratio		1
Transmission PTO		Prepared for PTO fitment
Transmission PTO control		PTO speed controlled by accelerator pedal& external lever
DRIVE AXLE		
Model		RTS23070A
Reduction type		Single reduction hypiod
Final ratio		4.13

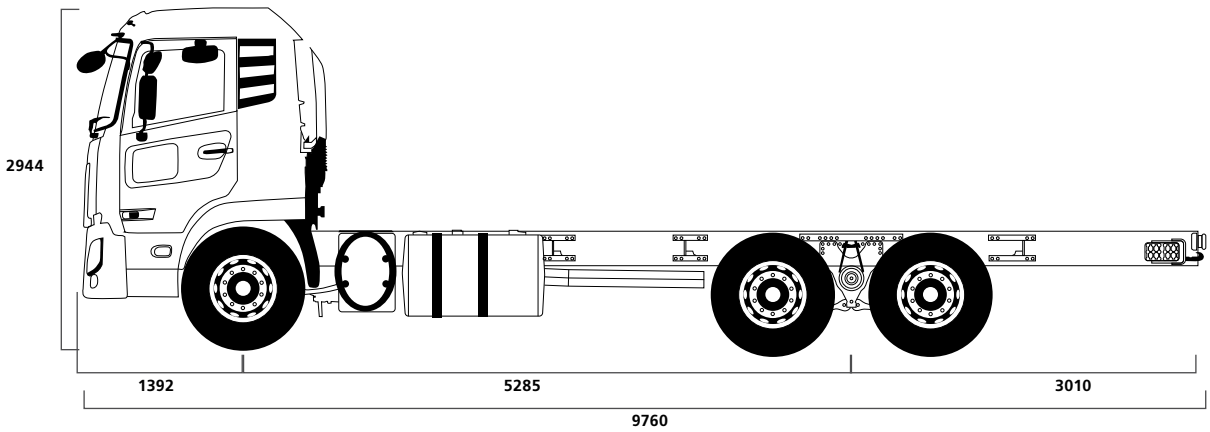

SUSPENSION		
Front		Mechanical Leaf Suspension
Rear		Leaf suspension
Shock absorbers		Without Rear Shock Absorber
Stabilisers (front)		Standard
Stabilisers (rear)		Without
STEERING		
Operation		Power
BRAKES		
System type		Full air
Front		Disc brakes
Rear		Disc brakes
Park brake system		Rear Spring Brake (Both)
Exhaust brake		Standard
Engine brake		Standard
Retarder		Standard (Brake blending - Disc Brake & retardation)
BASIC SAFETY		
LED headlamp		Standard
Cab entry & exit		Long grip & Steps
ADR safety pack		Without
Speed limiter	km/h	80 (Remote speed limiter)
PASSIVE SAFETY		
SAFES Cabin – MLIT (Japanese Std)		Standard
SRS Air Bag		Standard
Crushable Steering Wheel		Standard
Front Under run Protection Device		Standard
Door beam		Standard
ACTIVE SAFETY		
Electronic brake system		ABS and AEBS (Auto Emergency Braking System)
Headway support System		Forward Collision Warning + Adaptive Cruise Control + Emergency Brake
Lane Support System		Lane Departure Warning
Driver alert support		Drowsy driver warning (65 km/h and above)
UD Stabilty system ESP		Standard
ELECTRICAL & FUEL		
Fuel tank 1 capacity	ltrs	405
Fuel tank 2 capacity	ltrs	210
AD-Blue Tank	ltrs	70
TYRES		
Size and ply rating – front		315/80R22.5 (Steel Rims)
Size and ply rating – rear		315/80R22.5 (Steel Rims)
CAB		
Type		Single Sleeper Cab (With cab back mattress)
Roof		Standard roof
Cab suspension		Air bellow
No. of bunks		1
No. of seats		3
Seat Belts		Standard – ELR with Reminder (Lap Belt with Center Seat)
Seats		Fully adjustable air suspension, passenger seat-adjustable backrest only
Air conditioning		Manual Controlled Climate /Air Condition
Radio/USB		Standard
Cruise control		Standard
On-board computer		Multi Display Function
Tilt cab		Electrical
Speed limiter	km/h	80
Day Time Running Lights		LED Technology
Rear View Mirrors		6 total (Front and LHS close proximity ,rear and wide angle RHS & LHS)
12 Volt Power Outlet		Dual dashboard electric outlet
Rear lower storage underbunk		Standard
Driver Fuel Coaching Tool		Standard
Telematics Communication Gateway		Gateway with 4G/LTE and WLAN

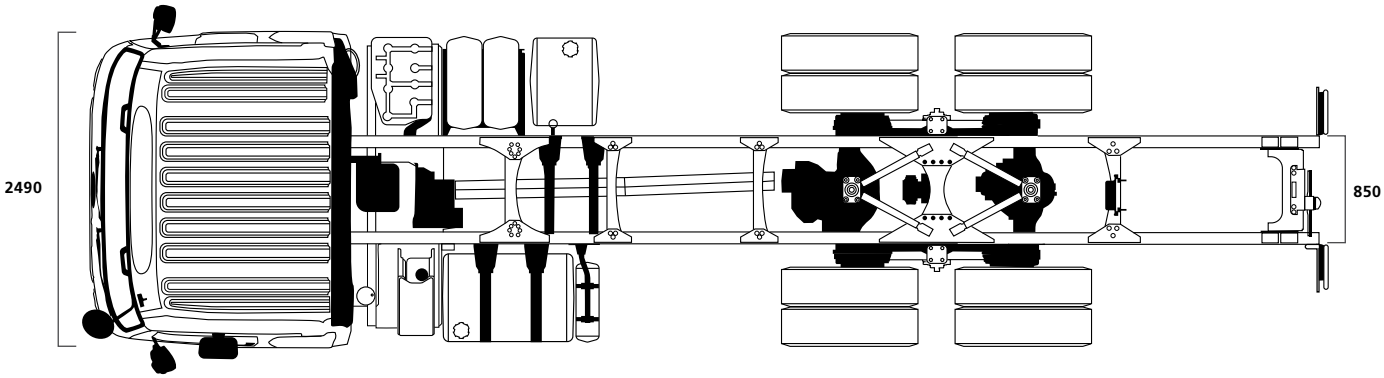

Specifications and options may differ depending on each country due to regulations or special requirements.
Dimensions and devices may be changed without prior notice. Please contact your nearest UD Trucks dealer for further details.