RENAULT CAPTUR

compact and assertive SUV

Powerful front end, esprit Alpine version with iconic sporty style, Renault Captur asserts its urban suv character. With generous interior space, Google built openR link multimedia system[1] and advanced driver-assistance systems, it stands out in every respect.

Enjoy a thrilling drive in the exciting 113kW Captur engine.

113kW 1.3L Turbo

Over 500km range in one tank[2]

up to 616 litres[3] of boot volume[4]

Google built openR link multimedia system[1]

recycled materials

advanced driving-assistance systems

(1) Google, Google Play, Google Maps, Waze and other brand names are trademarks of Google LLC.
(2) with a full tank of petrol according to WLTP data (including the reserve tank). (3) depending on engine and with bench seat in the forward position. (4) equivalent volume measured according to the VDA standard (ISO 3832) of 404, 518 and 1,363 dm^3 for the petrol version. (the VDA standard involves measuring the total volume of the boot using standardised shape and volume objects (200 mm x 100 mm x 50 mm = 1 dm^3).

interactive menu

01. design

02. on-board experience

03. driving pleasure

04. multimedia

05. interior space

06. advanced driver-assistance systems

07. customisation

powerful style

Muscular front grille, streamlined headlight optics, satin shale grey F1® blade and redesigned Renault emblem. A sharper design for an ever more inspired style.

Dark chrome emblem, crystal rear lights, esprit Alpine signature badges on the front wings, and assertive sportiness of the 19" elixir alloy wheels exclusive to this version.

Rediscover Captur's DNA with its timeless two-tone touch. The piano black roof colour enhances the possible combinations.

arctic white highland pearl black roof

menu ↑

on-board experience

Immerse yourself in its eco-chic sports interior made using recycled materials. Select your driving style for a personalised driving experience thanks to multi-sense and its 4 modes[1].

Thanks to wireless mirroring, all of your apps, playlists, podcasts and calls are displayed on the multimedia screen. The wireless charger always ensures an optimal level of independence.

The esprit Alpine stands out with its blue top-stitching and a steering wheel adorned with blue/white/red stitching. Each seat back features the Alpine emblem.

(1) with extended grip option. (2) available on esprit Alpine only.

engine excellence

Renault Captur offers a petrol engine with excellent performance.

openR link multimedia system

With its central 10.4″ screen and 7″ TFT screen[3], the openR link multimedia system offers intuitive access to smartphone replication.

Seamlessly enjoy your Android Auto™ Apply CarPlay™ apps on your large 10.4 inch infotainment screen.

Waze™ is a community-based navigation app that shares information in real time. Waze boosts your peace of mind.

compact and generous

The interior space can be adjusted according to your needs thanks to the ingenious 16 cm sliding rear bench seat. This gives passengers knee room of up to 22 cm. You can reduce it to free up more space in the loading area.

The boot of up to 616 litres(1)(2) is extremely practical with its modular volume. In the blink of an eye, fold down the rear bench seat and enjoy total loading space of up to 1,596 litres(1), ideal for transporting long objects.

(1) depending on engine and with bench seat in the forward position. (2) equivalent volume measured.

menu ↑

human first program
safety by Renault

advanced driver-assistance systems

rear parking space exit warning when reversing
The driver is warned when an object (vehicle, motorcycle, bicycle, etc.) approaches from the rear of the vehicle with a risk of collision.

360º sensors
360 sensors allow you to perform otherwise difficult manoeuvres effortlessly.

driver-assistance systems

- hill start assist
- predictive eco-driver assistant
- speed limiter
- cruise control

park assist systems

- rear parking assist
- front parking assist
- side parking assist
- rear view camera

safety assistance systems

- occupant safe exit alert
- blind spot warning
- rear parking space exit warning when reversing
- automatic switching between main / dipped beam headlights

menu ↑

colours

arctic white (p)

iron blue (mp)

passion red (mp)

urban grey (mp)

oyster grey (mp)

p: pearlescent
mp: metallic paint.
photos not contractually binding.

menu ↑

techno

- height-adjustable driver's seat
- metallic grey decorative upper strip
- openR link multimedia system with 10.4″ touchscreen compatible with Android Auto™ and Apple CarPlay™, Bluetooth®, USB C sockets, wireless smartphone mirroring

embossed mottled grey assault fabric / black kario fabric with drake blue top-stitching

17″ steel wheels with nymphéa wheel trims

iconic

- granite grey decorative upper strip
- induction smartphone charger (depending on country)
- automatic air conditioning

embossed marled black faunny fabric / marled black mellow fabric / titanium black refined textile with fresh yellow top-stitching

18" black hole alloy wheels

esprit Alpine

- blue, white and red Alpine marking on front seats
- textured textile lower strip
- openR link 10.4"floating centre console with e-shifter gear lever

75% recycled madama jacquard fabric / fina textured titanium black refined textile with Alpine blue top-stitching

19" elixir alloy wheels

(1) Google, Android Auto, Google Maps, Waze and other brand names are trademarks of Google LLC

menu ↑

accessories

retractable towbar
With Renault's innovative electric-towing system, you can tow a trailer or carry bikes with minimum fuss.

premium sidesteps
Emphasise the car's SUV design and also allow easy access to the roof load.

esprit Alpine floor mats
The premium quality extends to the front and rear mats with blue stitching that adds a touch of sophistication. The distinctive signature features the Alpine logo on the front mats.

high-comfort black cushions on rear headrests
For first-class travel, opt for the rear headrest cushion, which adds style and a feeling of well-being.

(1) depending on version.

menu ↑

dimensions and volumes

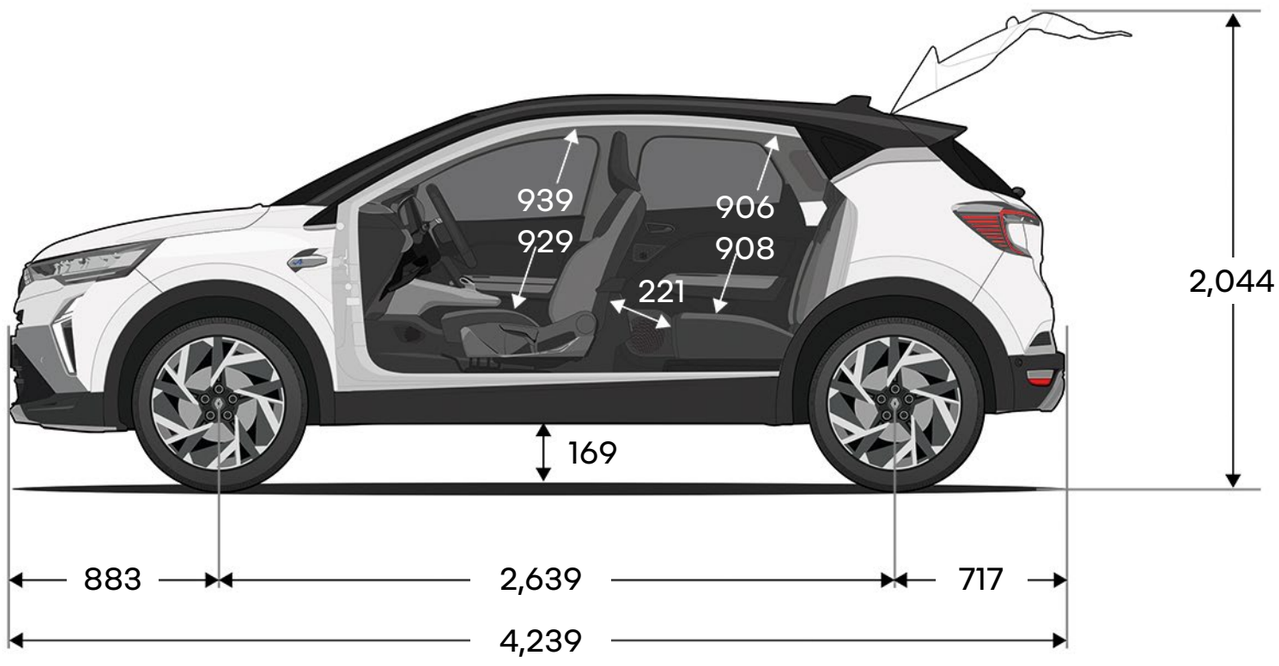

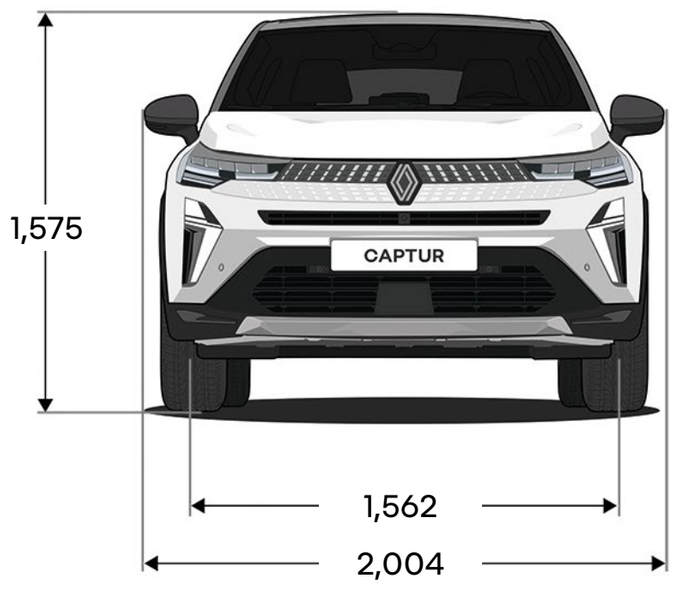

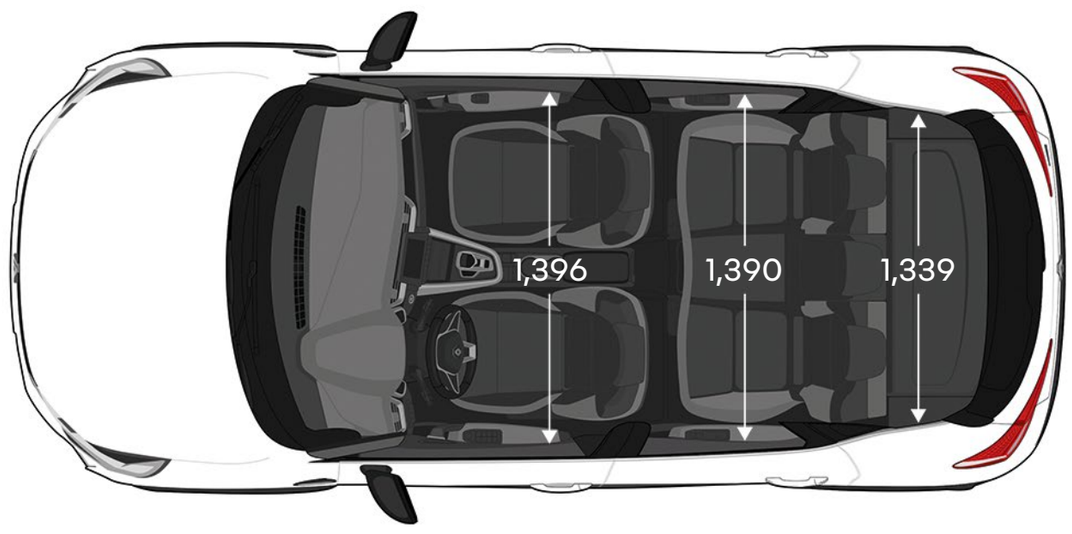

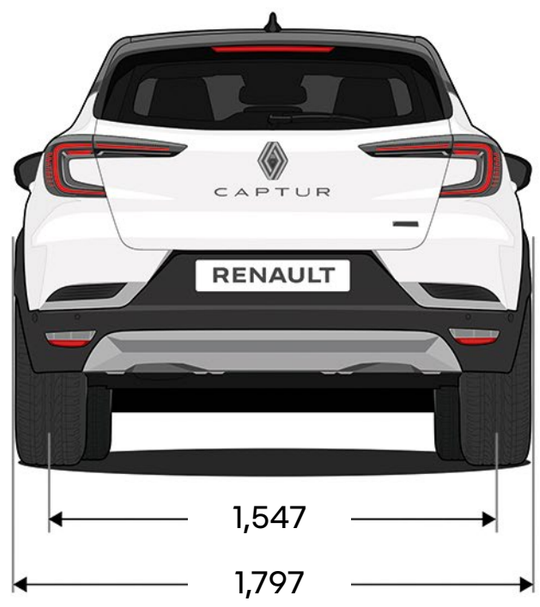

boot volume (in litres)(1)	
boot volume, bench seat in rear position	484
boot volume, bench seat in forward position	616
boot volume, bench seat folded down	1,596

dimensions in (mm). All volumes are with repair/inflation kit (without spare wheel)
(1) volume according to the VDA (ISO 3832) standard: the standard involves measuring the total volume of the boot using standardised shape and volume objects (200 mm x 100 mm x 50 mm = 1 dm^3).
Equivalent for petrol: 404, 518 and 1,363 dm^3

menu ↑

human first program
safety by Renault

the human first program is a comprehensive safety programme developed by Renault in collaboration with researchers, experts and firefighters.

because road safety concerns all road users, whether they are pedestrians, cyclists, motorists, the human first program by Renault is committed to:

1. **prevent accidents by developing safety equipment and advanced driver-assistance and safety systems**

advanced driver-assistance systems/more than 60 safety features, up to 7 airbags, child seats (Isofix), Renault Fixe4sure solution / more than 2,000 safety-related patents filed since 1970

2. **manage accidents once they have happened by drawing on innovations developed in collaboration with the fire service**

QRescue / Fireman Access / more than 5,000 firefighters trained over 10 years in 20 countries worldwide / around 400 cars donated per year for their training

3. **reduce the number of accidents and their severity by investing massively in R&D**

safety score / safety coach / connected services / big data / artificial intelligence and cybersecurity systems

learn more about the human first program

Renault care service

We are always at your side to make the driving experience easier and save you time with the maintenance of your Renault: online quotes and appointments, fixed-price packages, maintenance contracts, insurance and assistance, personalised My Renault programme... Take advantage of our simple and fast solutions tailored to your needs.

find out more about Renault care service

RENAULT CAPTUR

01. interior trims

02. equipment

03. engine

04. equipment and options

01. Interior trims

techno

iconic

esprit Alpine

02. equipment

techno

safety
- front, front side, and front and rear side curtain airbags
- ESC, ABS
- tyre pressure monitoring system
- Isofix system (i-Size) attachments on the rear side seats

driving
- rear parking assist
- hill start assist
- automatic illumination of headlights with light sensor
- electric central door locking with remote control and automatic door locking when the vehicle is in motion
- eco mode
- full LED front headlights
- cruise control-speed limiterelectrically-heated and defrosting door mirrors
- instrument panel with 7" screen

comfort
- manual heating and air conditioning system
- central console with storage and armrest
- height-adjustable driver's seat
- one-touch electric windows at the front and the rear
- height- and depth-adjustable steering wheel
- 1/3-2/3 split-folding rear bench seat that slides over 16 cm with 3 height-adjustable headrests

multimedia
- openR link multimedia system with 10.4" touchscreen compatible with Android Auto™ and Apple CarPlay™, Bluetooth®, USB C sockets, wireless smartphone mirroring
- Google Built openR link 10.4' screen
- digital operating instructions in the vehicle's multimedia system

exterior design
- black textured lower door protection
- black front and rear skid plates

interior design
- metallic grey decorative upper strip
- titanium black injected lower strip
- textured upper dashboard skin
- satin chrome interior door handles and gear lever surround
- refined textile steering wheel with chrome trims

packs
- flying console (only with automatic gearbox)
- two-tone roof and door mirror shell colour
- style pack (17" ediris alloy wheels + tinted rear side windows and rear window)
- spare wheel pack

iconic (techno +)

comfort
- Renault hands-free card
- electric power-fold and adjustable door mirrors
- automatic air conditioning
- rain sensor

multimedia
- induction smartphone charger (depending on country)

exterior design
- 18" black hole alloy wheels
- glossy black lower door protection

interior design
- granite grey decorative upper strip
- textured lower strip
- electrochrome interior rear-view mirror

options and packs
- two-tone roof and door mirror shell colour
- front and rear parking distance control
- roof bars

esprit Alpine (iconic +)

exterior design
- 19" elixir alloy wheels
- shale grey front and rear skids
- special front bumper with shale grey blade
- Alpine style badges on front wings

interior design
- degraded blue brushed trim upper strip
- textured textile lower strip
- Alpine marking
- frameless electrochrome interior rear-view mirror
- steering wheel with red white blue stitching
- heated front seats

driving
- occupant safe exit alert
- rear parking space exit warning
- blind spot warning

packs
- two-tone roof and door mirror shell colour
- parking pack (360 Sensors)
- spare wheel
- electric sunroof with sliding sunblind dimming
- Note: roof bars (not compatible with electric sunroof)

(1) Google, Google Play, Google Maps, Waze and other brand names are trademarks of Google LLC. Android Auto™ is a trademark of Google Inc. Apple CarPlay™ is trademark of Apple Inc.
Auto = automatic transmission

03. engine

ENGINE	1.3 Turbo EDC
Fuel	Unleaded petrol
Engine type	Turbo-Indirect injection
Capacity (cm^3)	1 333
Number of cylinders/valves	4/16
Max. power (kW)	113
Max. power rating (rpm)	6 000
Peak torque (Nm)	270
Peak torque rating (rpm)	1 700
Catalytic converter	Standard
GEARBOX	
Type	EDC - Automatic Dual Clutch
Number of gears	7
BRAKES AND SUSPENSION	
Anti-locking braking system (ABS)	Standard
Electronic Brake Distribution (EBD)	Standard
Emergency Brake Assist (EBA)	Standard
Hill Start Assist (HSA)	Standard
Front brakes	Disc
STEERING	
Type	Electric power-assisted steering
Turning circle between kerbs/walls (m)	10.42
Number of turns lock to lock	2.7
WHEELS AND TYRES	
Techno tyre size	17" - 215/60 R17 96 H
Iconic tyre size	18" -
Esprit Alpine tyre size	19" -
PERFORMANCE	
Top speed (km/h)	193
0 - 100km/h	9.6
CONSUMPTION AND EMISSIONS*	
Urban cycle (L/100 km)	7.5
Extra Urban cycle (L/100 km)	5.4
Combined cycle (L/100 km)	6.6
Emissions CO_2 mixed cycle (g/km)	149
Fuel tank capacity (L)	48
WEIGHT(KG)	
Tare weight (excluding driver)	1 365
Gross vehicle mass (GVM)	1 800
Maximum trailer gross vehicle mass (GVM)	1 200
Maximum gross vehicle mass (GVM) for unbraked trailer	683
Gross combined mass (GCM)	3000

* Fuel consumption and CO^2 emissions are certified using a standard, regulated method. It is identical for all manufacturers and allows vehicles to be compared. Fuel consumption in actual usage depends on the vehicle's usage conditions and equipment and the driver's driving style.

04. equipment and options

	techno	iconic	esprit Alpine
advanced driver-assistance systems			
safety			
occupant safe exit alert	-	-	▪
blind spot warning	-	-	▪
rear parking space exit warning when reversing	-	-	▪
automatic main/dipped beam headlight activation	▪	▪	▪
driving			
hill start assist	▪	▪	▪
predictive eco-driving assistant	-	▪	▪
tracking distance	▪	▪	▪
speed limiter	▪	▪	▪
cruise control	▪	▪	▪
parking			
rear parking assist	▪	▪	▪
front parking sensors	-	▪	▪
side parking sensors	-	-	▪
rear view camera	▪	▪	▪
360° around parking sensors	-	-	▪
comfort & safety			
front airbags (passenger with deactivation), curtains, between passenger/driver and front/rear side airbags	▪	▪	▪
5-seat safety belt reminder with occupant detection	▪	▪	▪
ESC, ABS	▪	▪	▪
LED brake lights	▪	▪	▪
tyre pressure monitoring system	▪	▪	▪
Isofix system (i-Size) attachments on the rear side seats	▪	▪	▪
electric parking brake with Auto-Hold function	-	▪	▪
electric central door locking with remote control and automatic door locking when the vehicle is in motion	▪	▪	▪
full LED performance headlights – Renault LED Pure Vision	▪	▪	▪
automatic windscreen wipers with rain sensor	▪	▪	▪
automatic illumination of headlights with light sensor	▪	▪	▪
on-board experience			
steering wheel-mounted paddles (with EDC transmission only)	▪	▪	▪
Renault multi-sense, customisation of driving modes and interior environments (4 modes: comfort, eco, sport and custom)	-	▪	▪
electric power-fold and adjustable door mirrors	-	▪	▪
automatic day/night interior rear-view mirror (electrochrome)	-	▪	-
rimless electrochrome interior rear-view mirror	-	-	▪
Renault hands-free opening and start card	▪	▪	▪
height-adjustable driver's seat	▪	▪	▪
height-adjustable passenger seat	-	▪	▪
on-board experience (continued)			
heated front seats	-	-	▪
6-way electrically adjustable driver and passenger seats with lumbar control	-	-	▪
4 electric one-touch-up windows	▪	▪	▪
height- and depth-adjustable steering wheel	▪	▪	▪
automatic air conditioning	-	▪	▪
manual heating and air conditioning system	▪	-	-
Interior LED lighting	-	▪	▪
courtesy mirror light	-	-	▪
digital operating instructions in the vehicle's multimedia system	▪	▪	▪

04. equipment and options

	techno	iconic	esprit Alpine
multimedia			
7" high-definition customisable digital driver instrumentation	▪	▪	▪
wireless Android Auto™ and Apple CarPlay™ mirroring	▪	▪	▪
10.4" openR link: multimedia system with integrated radio	▪	▪	▪
wireless phone charger	-	▪	▪
2 USB-C sockets in the front	▪	▪	▪
2 USB-C sockets in the rear	-	▪	▪
Arkamys® auditorium audio system with 6 speakers	▪	▪	▪
storage and modular layout			
1/3-2/3 split-folding rear bench seat that slides over 16 cm with 3 height-adjustable headrests	▪	▪	▪
central console with storage and armrest	▪	▪	▪
adjustable boot floor	-	▪	▪
front-seat seatback pockets	-	▪	▪
exterior design			
black glossy air deflectors	▪	▪	▪
black front and rear door pillars	▪	-	-
glossy black front and rear door pillars	-	▪	▪
radiator grille with 3D graphics: black upper part with body-tone graphics - body-tone lower part	▪	▪	▪
body-coloured exterior door handles	▪	▪	▪
glossy black door mirrors	▪	▪	▪
black textured lower door protection	▪	-	-
glossy black lower door protection	-	▪	▪
black front and rear skid plates	▪	▪	-
glossy black shark-fin aerial	▪	▪	▪
17» ediris alloy wheels	▪	-	-
18» black hole alloy wheels	-	▪	-
19» elixir alloy wheels	-	-	▪
tinted side rear windows and rear screen	▪	▪	▪
Alpine esprit exterior trim: shale grey front and rear skid plates, Alpine esprit style badge in the front wings, dark ice badge, glossy black lower door protectors, glossy black window weatherstrips	-	-	▪
interior design			
metallic grey decorative upper strip	▪	-	-
granite grey decorative upper strip	-	▪	-
textured upper dashboard skin	▪	▪	▪
satin chrome gear lever surround	▪	▪	▪
refined fabric gear lever knob	▪	▪	▪
satin chrome-plated air vent surrounds	-	▪	▪
chrome-plated trim on steering wheel	▪	▪	▪
satin chrome inner door handles	▪	▪	▪
refined fabric steering wheel	▪	▪	▪
esprit Alpine style interior trim: top strip with brushed blue decor, textured textile lower strip, aluminium pedal unit, seat belts with blue border, steering wheel with blue white red top-stitching, front seats with Alpine logo, Alpine aluminium door sill.	-	-	▪
chrome start button surround	-	▪	▪
gear lever and central armrest (automatic gearbox only)	▪	▪	▪
floating centre console, with e-shifter	-	-	▪
options			
comfort pack (automatic air conditioning, automatic activation of windscreen wipers)	-	▪	▪
openR link multimedia system with Google built in(1) (Google Maps, Google Assistant & Google Play(2), including front and side parking distance control	-	-	▪
heated front seats	-	-	▪
spare wheel (mobile boot floor and temporary spare wheel)	▪	▪	▪
two-tone	▪	▪	▪
all-weather tyres	▪	▪	▪
temporary spare wheel	▪	▪	▪
tinted windows (rear side and rear screen)	▪	▪	▪
electric sunroof with fabric sunblind (not compatible with longitudinal roof bars)	-	-	▪
roof bars (not compatible with electric sunroof)	-	▪	-

·: standard. o: optional. -: unavailable.
Android Auto™ is a trademark of Google Inc. Apple CarPlay™ is a trademark of Apple Inc. (1) Google, Google Play, Google Maps, Waze and other brand names are trademarks of Google LLC. (2) the use of applications downloaded from Google Play requires a dedicated data package. To use these apps, share your phone's connection with your Renault. You can also subscribe to a pay-as-you-go offer from our partner Orange (offer without commitment) where the first 3 GB are free (valid for 6 months).

Every precaution has been taken to ensure that this publication was accurate and up-to-date when printed. This document was created using pre-production and prototype models. In line with its policy of continuous product improvement, Renault reserves the right to modify the specifications, vehicles and accessories described and featured at any time. Any such modifications are communicated to Renault dealers as quickly as possible. Depending on the country of sale, versions may differ and certain equipment may be unavailable (as standard, optional or as an accessory). Please contact your nearest dealer for the latest information. For technical printing reasons, the colours featured in this document may differ slightly from those of the actual paintwork or interior trim. All rights reserved. Reproduction in any format and by any means of all or part of this publication is prohibited without prior written authorisation from Renault.

Publicis – photo credits: C. Pausania, © Renault Marketing 3D-Commerce – August 2025.

Renault recommends Castrol

www.renault.co.za

menu ↑