UD TRUCKS

Croner Bus
Make the Connection

PKE 280 / LKE 210 BUS
Make the Connection

Going the Extra Mile

Connecting people to **opportunities**

Connect rural areas to economic hubs. Connect workers to workplaces. Each seat in the vehicle equipped with a USB port, so passengers can stay connected on the move.

The UD Trucks Croner PKE 280 and LKE 210 buses adopt the same architecture as the South African medium duty leader UD Trucks Croner to secure quality, durability and fuel consumption.

The UD Trucks Croner has enjoyed over 6 years as a market leader in fuel consumption, robust and optimized drive line. We are proud to extend our Croner offering into the bus market, keeping the quality, architecture and reliability the same.

Croner Bus
Model Line-Up

Connect people to opportunities. Connect rural areas to economic hubs.
Connect mobility to comfort.

Specifications		LKE 210/240 Bus (leaf)	PKE 280 Bus (air)	PKE 280 Bus (leaf)
Seating capacity		40 passengers	65 passengers	65 passengers
Standing passengers		12 passengers	10 passengers	10 passengers
Engine	Power	GH5E: LKE 210: 158 kW @ 2 200 rpm LKE 240: 177 kW @ 2 200 rpm	GH8E: 206 kW @ 2 200 rpm	GH8E: 206 kW @ 2 200 rpm
Engine	Torque	825 Nm / 900 Nm	1 050 Nm @ 1 100 – 1 700 rpm	1 050 Nm @ 1 100 – 1 700 rpm
Transmission		Allison 2500	Allison 3000	Allison 3000
Axle ratings	Front Axle	5 500 kg	7 100 kg	7 100 kg
Axle ratings	Rear axle	9 500 kg	11 000 kg	11 000 kg
GVM		15 000 kg	17 000 kg	17 000 kg
Suspension		Leaf suspension	Air suspension	Leaf suspension

Croner PKE 280 Air and Leaf Suspension

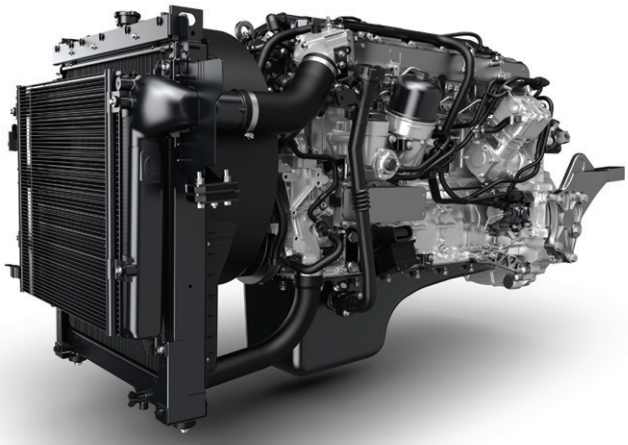

Connect to fuel efficiency

The UD Trucks PKE 280 urban buses bring modern mobility to both Africa's far-flung remote areas and its metropolitan centres – reliably, economically and comfortably.

The GH8E 280 is a fuel-efficient engine with high capacity offered in both Euro III and Euro V emission standards. As a result, it is, amongst other things, suitable for bus application, and regional distribution where both performance and fuel economy are crucial factors. The engine boasts a sturdy, dependable design featuring an overhead camshaft, four valves per cylinder and precisely controlled common rail injection, exhaust pressure governor (EPG) & turbocharger.

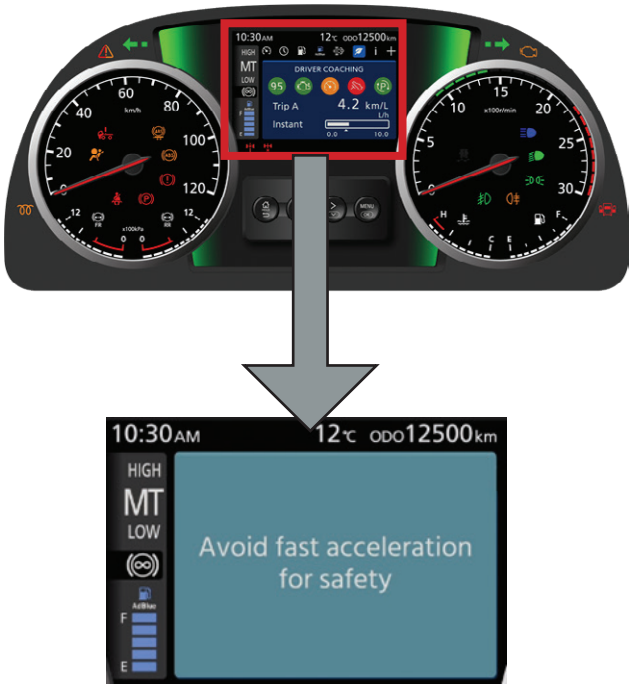

Connect to fuel efficiency with real time driver coaching notifications

4 sweet spot notifications, that prompts the driver to drive in the most optimum condition that is defined by the green band. Coaching drivers to hit the sweet spot more often and drive more efficiently.

9 driver coaching notifications, coaching drivers on the engine utilization and safety for better overall driving.

4 Sweet spot notifications

9 driver coaching notifications

Connect to safety

Passenger convenience and safety is a priority. The bus has illuminated step lights at the entrances to help improve visibility and protect commuters when boarding at night.

It has SABS-approved chevron plates at the rear of the bus body and reflective tape on the sides to improve visibility on the road and reduce the likelihood of collisions in low-light or dark conditions.

The full-length handrails enhance the ergonomic features and safety of the bus by providing support for standing passengers and preventing them from falling while in motion. Additionally, every unprotected seat features a lap-type safety belt to mitigate the impact of sudden stops in the event of a collision.

The bus is equipped with 2.5 kg dry chemical powder fire extinguishers to curb the spread of fire, while emergency exit roof hatches ensure passengers' safe evacuation in the event of a fire or accident.

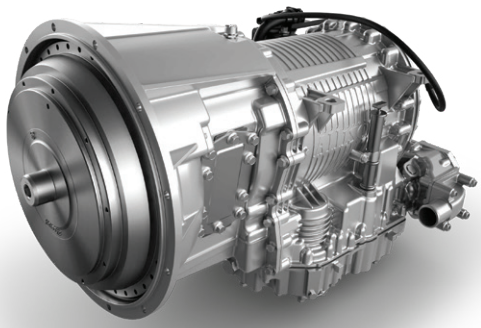

Connect to drivability

The new Allison 6th generation provides enhanced Cybersecurity and Functional Safety (ISO26262). The transmission also features a 1.98 stall torque ratio torque converter resulting in high starting torque.

Smooth gear change that cover the entire 6 speed range in relation to load and topography leading to increased driving comfort. It is very gentle on the bus since it automatically lets the engine operate within its best rev range which results in optimal fuel economy and driving comfort.

The gearbox is conveniently operated via pushbuttons in the control panel. The ergonomically and logically laid out control panel has a clear display.

Connect to drivability

The PKE 280 Bus comes in two variants to cover a wide range of the South African Road conditions. The PKE 280 air and leaf suspension.

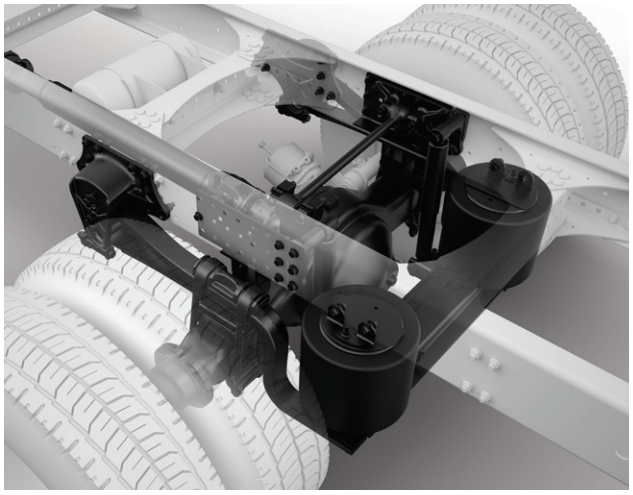

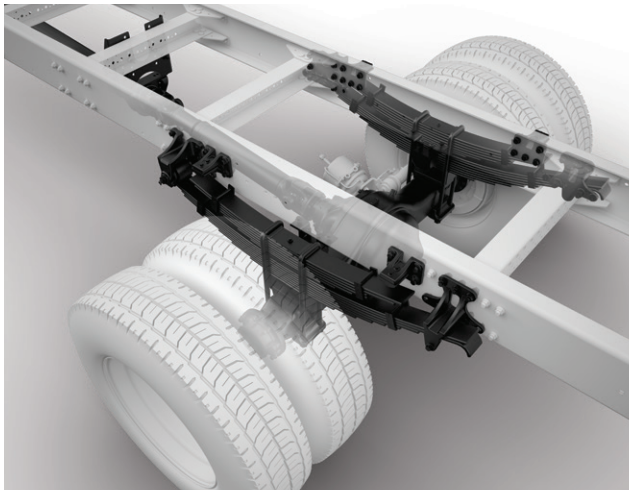

PKE 280 air suspension

Air suspension greatly reduces the chassis vibrations improving comfort and drive-ability in on-road vehicles. By minimizing the vibrations experienced, the overall ride is more comfortable and enjoyable.

PKE 280 leaf suspension

The key benefit of the leaf suspension is the increased service life, which greatly reduces maintenance costs and downtime for repairs. For severe rural bus applications and routes, optional suspension specification is available to provide even greater stability and durability.

Connect to productivity

The Croner PKE 280 bus can comfortably seat 65 and 10 standing passengers. With high volume parcel shelves in vinyl, passengers can store their smaller items safely and easily. Additionally, the high loading capacity luggage lockers located in both the wheelbase and rear overhang provide ample space for larger items such as suitcases and backpacks. This is made possible by its 11 tons rear axle which is 3 tons above the regulation requirement to allow for optimal weight distribution and better payload capabilities.

Connect to uptime

Preventive Maintenance is crucial in maintaining customer uptime, ensuring that vehicles receive maintenance at the appropriate time based on actual truck usage. This is essential in preventing unexpected stops and minimizing downtime. The UD Croner bus has a health monitoring tool that alerts dealers and call centres of critical issues, allowing them to promptly bring the vehicle in for maintenance and maximize customer uptime. An updated service plan not only reduces downtime but also contributes to cost savings by identifying potential problems before they become more significant issues.

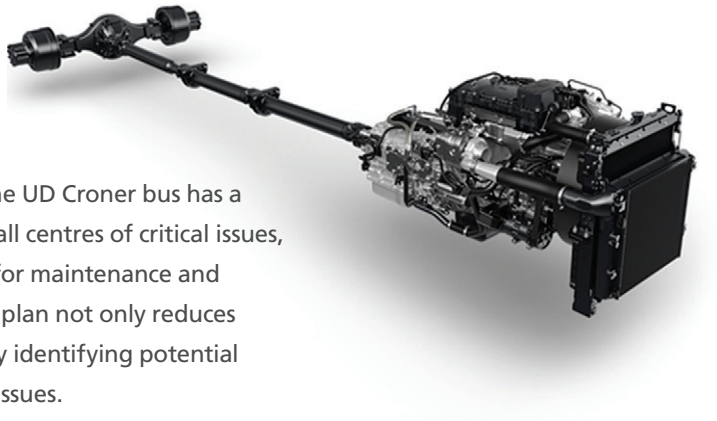

LKE 210/240 Bus

Connect rural areas to economic hubs. Connect workers to workplaces.
Make the connection with the LKE 210/240 Bus.

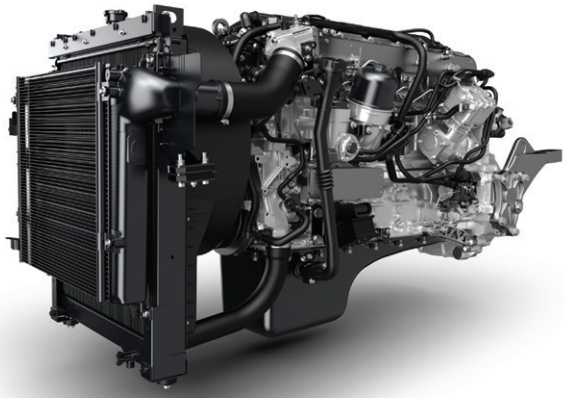

Connect to fuel efficiency

The LKE 210 and LKE 240 buses feature GH5E 210 and GH5E 240 Euro V engines which produce a great deal of torque even at low engine speeds. This results in quick response and smooth driving properties, which in turn results in improved fuel economy.

Connect to fuel efficiency with realtime driver coaching notifications

With a distinctive clear and simple design, the new instrument cluster enables the driver to operate as safely and efficiently as possible by ensuring information is readily accessible and functions are easy to operate – when driving, loading, and finding the right route. Interactive driver fuel coaching menu displays up to 9 driver coaching notification and four sweet spot notifications as shown below:

- Optimal air to fuel ratio
- Coaching to save fuel
- Decrease engine speed
- Speed reduction for fuel saving

4 Sweet spot notifications

- Use Cruise control to save fuel
- Good use of Cruise control
- Coast when reducing speed to save fuel
- Great Coasting
- Reduce idling to save fuel
- Reduce speed to save fuel
- Avoid hard braking for safety
- Avoid increased idle to save fuel
- Avoid fast acceleration for safety

9 driver coaching notifications

Connect to safety

When it comes to public transportation, passenger convenience and safety are crucial factors. At night, boarding a bus can be particularly challenging due to poor visibility. That's why we have installed illuminated step lights at the bus entrances to help commuters see where they're stepping, improving safety and convenience.

Our buses also feature SABS-approved chevron plates at the rear of the bus body and reflective tape on the sides to increase visibility on the road, particularly in low-light or dark conditions. These measures help reduce the likelihood of collisions and ensure that passengers arrive at their destinations safely.

In addition to ensuring passengers are safe while on the bus, we also prioritize their safety when boarding and disembarking. The full-length handrails installed in our buses enhance ergonomics and provide support for standing passengers, reducing the risk of falls while in motion. Moreover, each seat comes with a lap-type safety belt to mitigate the impact of sudden stops in case of a collision.

Lastly, fire safety is a critical concern for us. That's why our LKE 210/240 bus range comes equipped with dry chemical powder fire extinguishers to help curb the spread of fire and keep passengers safe in the event of a fire. At every step of the way, we prioritize passenger safety and convenience, ensuring that our buses are the best possible mode of transportation.

Connect to drivability

The new Allison 6th generation transmission boasts enhanced Cybersecurity and Functional Safety (ISO26262) and a 1.58 stall torque ratio, resulting in high starting torque. With smooth gear changes that adjust to load and topography across the entire 6-speed range, the engine operates at its best, providing increased driving comfort.

This transmission is also gentle on the bus, allowing for automatic adjustments in the rev range, optimizing fuel economy and driving comfort.

Operating the gearbox is easy with pushbuttons on the ergonomically designed and logically laid out control panel, which features a clear display for easy operation.

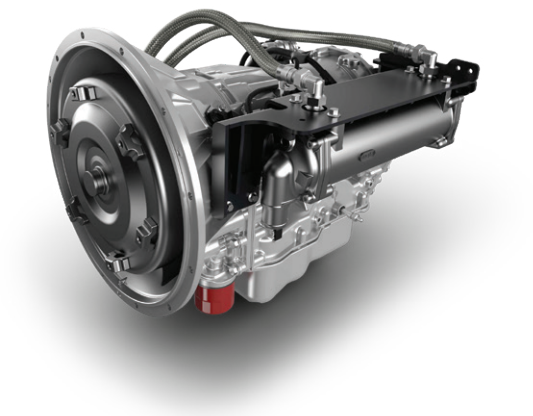

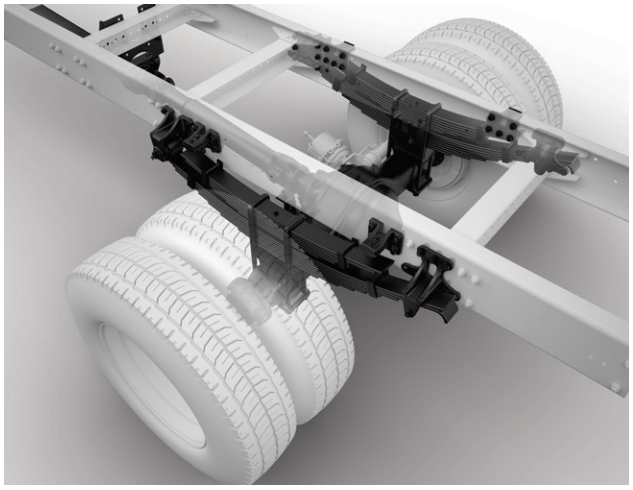

In a rear axle with a single reduction gear, the entire ratio step-down takes place in one single step in the final drive which makes great demands on its components. The LKE 210 Croner bus has a hypoid final drive that means the pinion's centre line is offset in relation to the centre of the crown wheel. This design leads to more teeth to mesh simultaneously, resulting in a strong, quiet, and very reliable final drive thus contributing to improved drivability.

Connect to productivity

The Croner LKE210 bus has a seating capacity of 40 passengers and can accommodate 12 standing passengers. Passengers can store smaller items safely and easily with the high-volume parcel shelves in vinyl. The bus also offers ample space for larger items such as suitcases and backpacks, thanks to the high loading capacity luggage lockers located in both the wheelbase and rear overhang.

Connect to uptime

UD Genuine Parts and UD Genuine Service are two of the cornerstones of our Ultimate Dependability Solution. UD Genuine Parts maintain effective performance over their lifecycle. This is a key contributor in providing customers with their expected levels of uptime. Our role is to help our customers with their business by using UD Genuine Parts and maintaining the vehicles in line with UD standards for prolonged vehicle lifecycle.

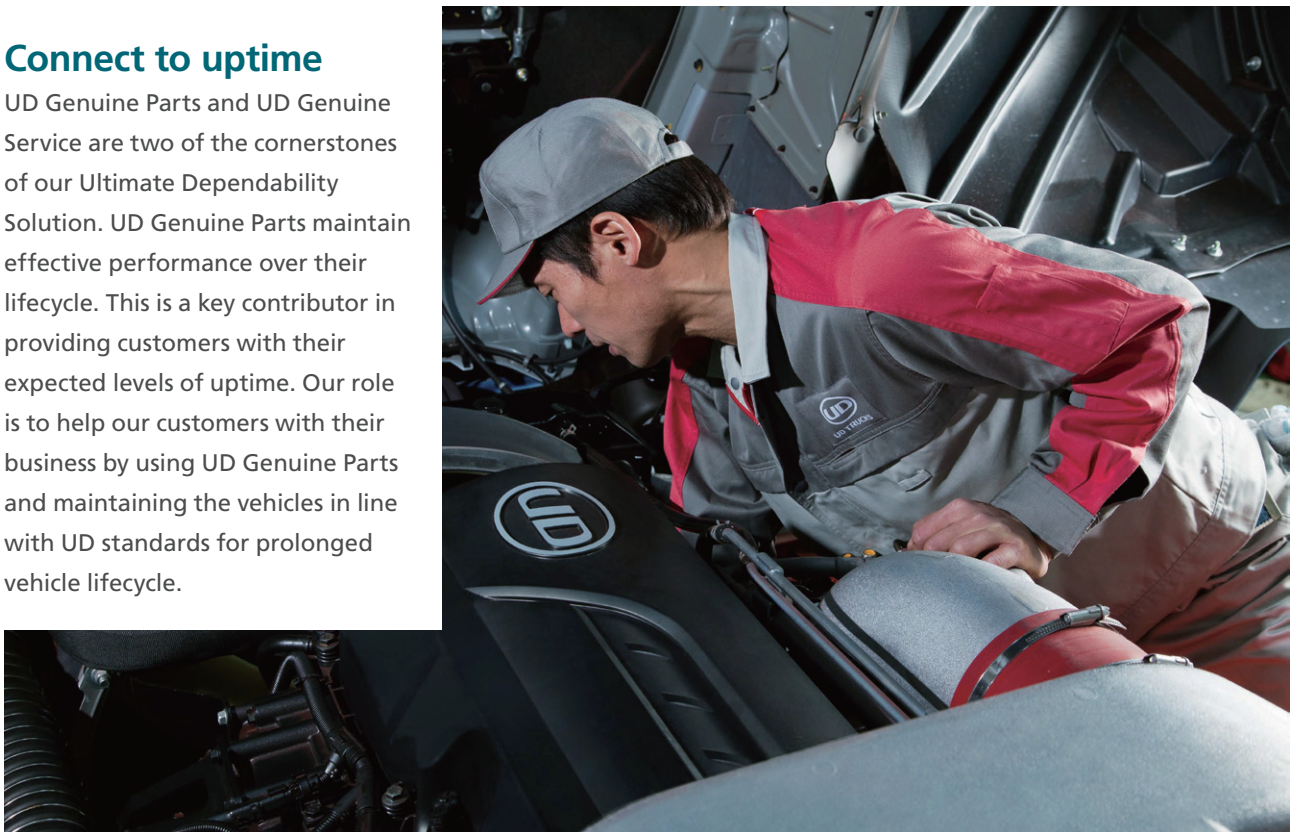

Drive for better with **GH5E and GH8E Euro 5**

Climate change is accelerating and air pollution which comes from diesel emissions is worsening. There is an increasing societal demand for stricter emissions regulations around the world and as a key industry player, we have the responsibility to provide sustainable transport solutions to ensure "Better Life" for our customers, society, and planet. UD Trucks PKE 280 GH8E engine is offered in both Euro III and Euro V. The LKE GH5E engine offered in Euro V has an increased horsepower of 240. The GH5E and GH8E engines are used in conjunction with the SCR technology which injects AdBlue into the exhaust system reducing the amount of pollutants released to the atmosphere. The benefits of SCR technology featured in our EURO V bus models includes improved fuel efficiency, sustainability, and reduced total cost of ownership.

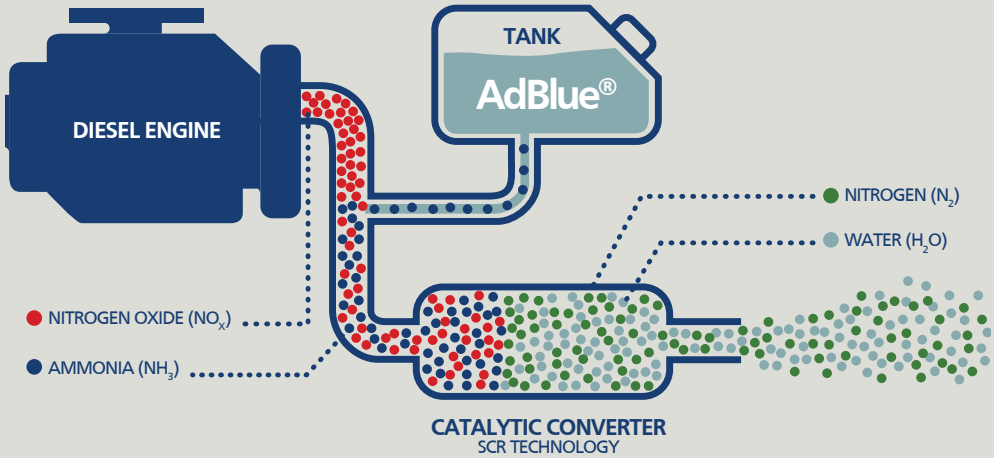

What

European emission standards are a set of acceptable limits of emissions defined by European Union.

Why

Purpose of these standards is to govern and gradually reduce air pollutants released into the atmosphere especially the NOX and PM emissions.

Emission standards are the legal requirements governing air pollutants released into the atmosphere. Emission standards set quantitative limits on the permissible amount of specific air pollutants that may be released from specific sources over specific time frames. They are generally designed to achieve air quality standards and to protect human life.

SCR environmental benefits

	What is it?	How is it created?
Nitrous oxide (NOx)	NOx are pollutants causing smog and acid rain that harms the society in several ways	Created in the combustion chamber, hotter combustion causes **more NOx created**
Particulate matter	PM is the black smoke we see coming out of the exhaust. This black smoke is soot or partially burned diesel	Created in the combustion chamber, cooler combustion causes **more PM created** (opposite to NOx)

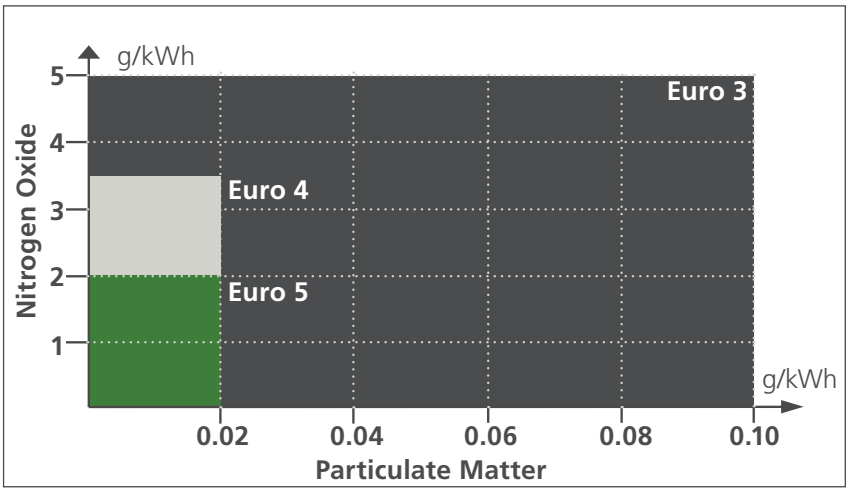

We vow to play our part for cleaner air that allows a sustainable environment for everyone. With Euro 5 SCR, nitrogen emissions are 43% lower and particulate matter emissions are 80% lower than Euro 3 levels. Compared with Euro 4 levels, Nitrogen oxides are 43% less.

UD Telematics. Always connected.

A high-tech wireless communication system designed to help you improve your profitability by increasing vehicle uptime and improving fuel efficiency, while reducing unplanned stops and costs.

Keeps you up to date

UD Telematics Services provides you with the necessary information about your fleet to enable you to know where your trucks are and the progress or status of your deliveries.

Assists with fuel optimization

UD Telematics Services generates easy to read reports on fuel usage. You will be able to help improve your driver's driving behaviour. This will result in more efficient fuel consumption resulting in significant cost savings.

Helps manage fleet uptime

UD Telematics Services supports you to maintain your vehicle uptime. Be it through regular preventive maintenance planning or remote assistance, we want to build a closer relationship with you so that your business can go the extra mile.

Service Agreement Options

Tailor the benefits of your UD Service Agreements by selecting from the following options:

UD Trust Standard

Covers the cost of all services during the period you choose, with the benefit of additional support functions.

UD Trust Ultimate

Offers the customer full cover on all repairs and maintenance over the designated period, with the added advantage of all support functions.

UD Driver Training

Ensure your trucks' fuel efficiency by developing your drivers' skills.

Contact your nearest dealer for more information and further expert assistance.

COVERAGE (All parts not listed below are specifically excluded):	Trust Standard	Trust Ultimate
Scheduled services (parts, lubricants, labour)	•	•
Top up fluids (only during scheduled services)	•	•
Limited clutch & pressure plate, release & pilot bearing (only if specified)		•
Limited brake linings (only if specified)		•
Limited Wearcheck reports (only if specified)		•
Bulbs (only during scheduled services)	•	•
Wipers (only during scheduled services)	•	•
Access to UD breakdown call centre		•
Breakdown repairs (only if repair covered by contract)		•
Towing of vehicle (only if repair covered by contract)		•
Engine repairs and related parts (fair wear & tear)		•
Clutch system (incl. clutch & pressure plate, release & pilot bearing)		•
Gearbox repairs and related parts (fair wear and tear)		•
Retarder repairs and related parts (fair wear and tear)		•
Power take off (genuine UD part and installation)		•
Propshaft repairs and related parts (fair wear and tear)		•
Differential repairs and related parts (fair wear and tear)		•
Hub repairs and related parts (fair wear and tear)		•
Suspension repairs (fair wear and tear)		•
Steering system and related parts (fair wear and tear)		•
Air conditioning system and related parts		•
Brake system (incl. brake linings) and related parts (fair wear and tear)		•
Electrical system and instruments		•

EXAMPLES OF EXCLUSIONS:

- Superstructure
  Bus bodybuilder superstructure (e.g. body panels, frame, air conditioning, lighting)
- Hydraulic system
- Batteries
- Glass, mirrors, windscreen, lens
- Tyres, rims and wheel alignment
- Fuel, air & hydraulic tanks
- Chassis rails, cross members
- Mounting brackets, straps, tailboards, tool boxes, mudgaurds, battery box
- Wind deflectors, body, cab and interior
- Accessories
- Towing of trailers
- COF, PDI

UD TRUCKS

UD Trucks Southern Africa

5 Piet Rautenbach Street, Rosslyn, 0200, South Africa
PO Box 911-362, Rosslyn, 0200
Telephone: +27 12 564 9500
udtrucks.com/southafrica | info.support@udtrucks.com

17702 Nov 2023