UD TRUCKS

Croner

LKE 210

H44

VEHICLE		H44
Model		LKE 210
Manufacturer's code		LKE42RGVW15
Model description		4x2 Freight Carrier
MASS		
Tare – total (T) *	kg	4 448
Tare Frt / Rr	kg	2 679/1 769
GVM	kg	15 000
V	kg	14 500
GCM	kg	16 000
D/T	kg	16 000
Axle – front GA/GAU	kg	5 500
Axle – front A/AU	kg	5 500
Axle – rear GA/GAU	kg	9 500
Axle – rear A/AU	kg	9 000
* Tools included in tare		Yes
PERFORMANCE		
Gradeability at V	%	31.02
Gradeability at D/T	%	28.11
Max. geared road speed	km/h	119
MAJOR DIMENSIONS		
Overall length	mm	9 432
Overall width	mm	2 372
Wheelbase	mm	5 500
CA – cab to rear axle	mm	4 816
ROH – Centre of rear axle to end of frame	mm	2 545
Turning radius (curb to curb)	mm	9 775
ENGINE		
Model		GH5E
Capacity	cm^3	5 100
Layout		In line four cylinder
Type		Turbo Intercooled (Common Rail)
Power at r/min	Kw	158 @ 2 200
Torque at r/min	Nm	825 @ 1 200–1 600
Emissions standard		EUR III
Protection		Standard
TRANSMISSION		
Model		Allison 2500
Shift		Full Automatic
No. of gears forward		6
First gear ratio		3.51
Top gear ratio		0.64
Transmission PTO		Prepared for PTO fitment

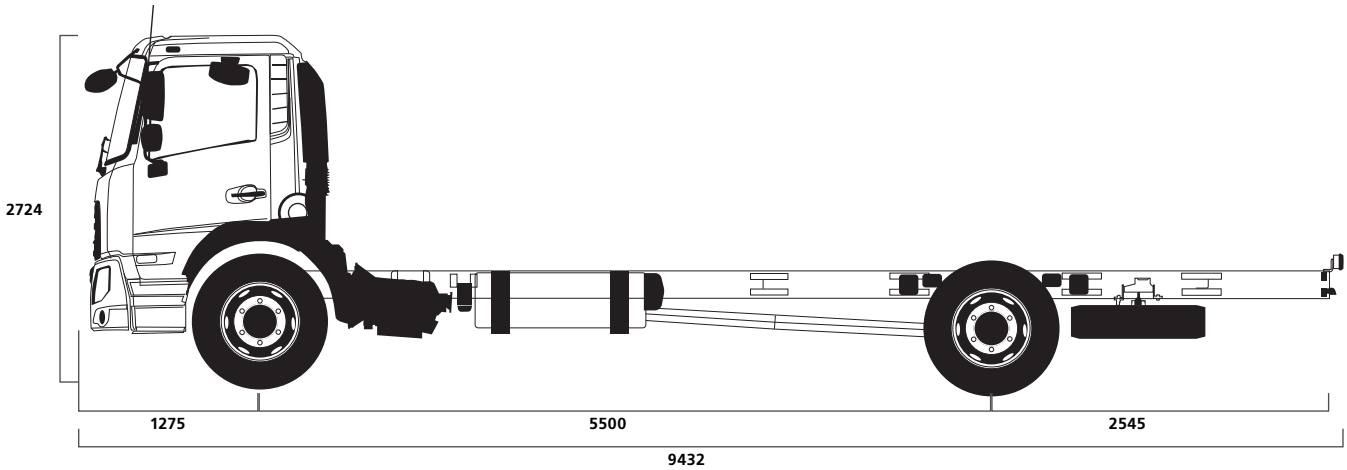

CLUTCH		
Torque converter		TC211 (1.58:1)
DRIVE AXLE		
Model		RSS0918
Reduction type		Single Reduction Single
Final ratio		5.57
SUSPENSION		
Front		Parabolic spring (Normal Stiffness)
Rear		Multileaf Spring
Shock absorbers		Without
Stabilisers		Standard
STEERING		
Operation		Power Assisted
Steering Wheel Tilt & Telescopic		Standard
BRAKES		
System type		Full Air
Front		S-cam Drum Brake
Rear		S-cam Drum Brake
Electronic brake system		ABS
Park/emergency system		Spring brakes-rear
Exhaust brake		Standard
ELECTRICAL & FUEL		
Fuel tank 1 capacity	ltrs	190
Fuel tank 2 capacity	ltrs	None
TIRES		
Size – front		10R22.5 tyres
Size – rear		10R22.5 tyres
CAB		
Type		Day Cab
No. of bunks		0
No. of seats		3 (Includes Center Seat)
Window lift		Mechanical/Manual
Seat Belts		Standard – ELR with Reminder (Lap Belt with Center Seat)
Seats		Fully adjustable, with Fire Retardant Material
Air conditioning		Standard
Radio/USB		Standard
On-board computer		Multi Function Display & In Vehicle Diagnostics
Tilt cab		Mechanical
Speed limiter	km/h	80
Day Time Running Lights		Without
Rear View Mirrors		6 total (Front and LHS close proximity, rear and wide angle RHS & LHS)
12 Volt Power Outlet		Standard in Dash
Overhead Storage Console		Standard
Driver Fuel Coaching Tool		Standard
Telematics Communication Gateway		Gateway with 3G and WLAN

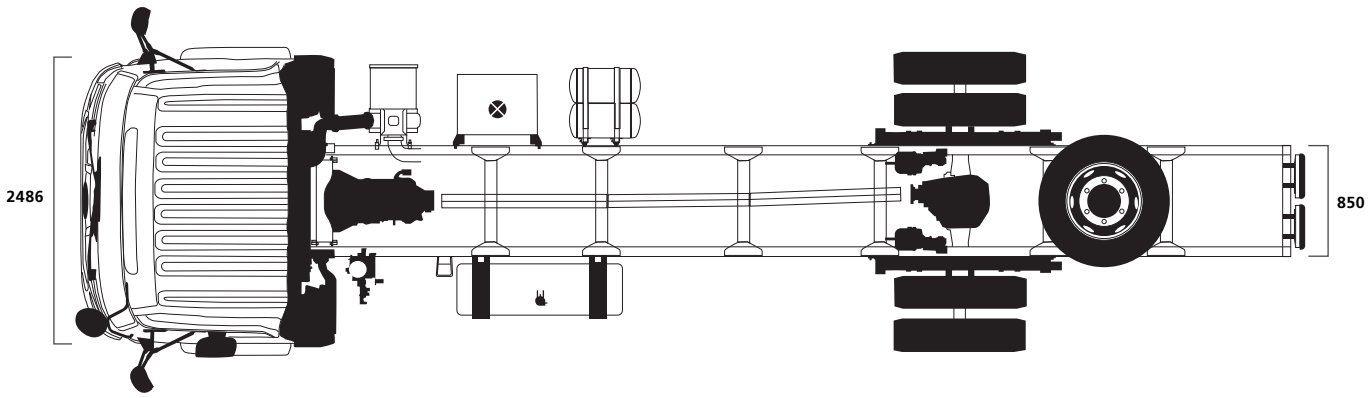

Specifications and options may differ depending on each country due to regulations or special requirements.
Dimensions and devices may be changed without prior notice. Please contact your nearest UD Trucks dealer for further details.