NISSAN
WARRIOR
WARRIOR | BY PREMCAR

THE ULTIMATE OFF-ROAD BAKKIE

BUILT IN SOUTH AFRICA, FOR THE TOUGH SOUTH AFRICAN TERRAIN.

A true warrior is forged in formidable conditions – and the Navara WARRIOR by Premcar is no exception. It has been designed, engineered, and tested by the highly skilled product development and engineering team at Premcar to take off-road capability to the next level, with specialised modifications tailor-made for harsh local conditions.

OFF-ROAD CAPABILITY

ENGINEERED FOR THE TOUGHEST TERRAIN.

The Navara WARRIOR by Premcar is built tough to let you explore the most challenging terrains. Automotive experts at Premcar have reengineered the already impressive Navara PRO-4X to enhance its off-road performance and durability even more, including a suspension lift, a wider track, higher ground clearance, and a updated fierce exterior to name a few.

232mm
Ground Clearance
(Increased 40mm vs. Navara Pro-4X)

1600mm
Track Width
(Increased 30mm vs. Navara Pro-4X)

35°
Approach Angle
(Increased 2.4° vs. Navara Pro-4X)

27°
Descent Angle
(Increased 0.5° vs. Navara Pro-4X)

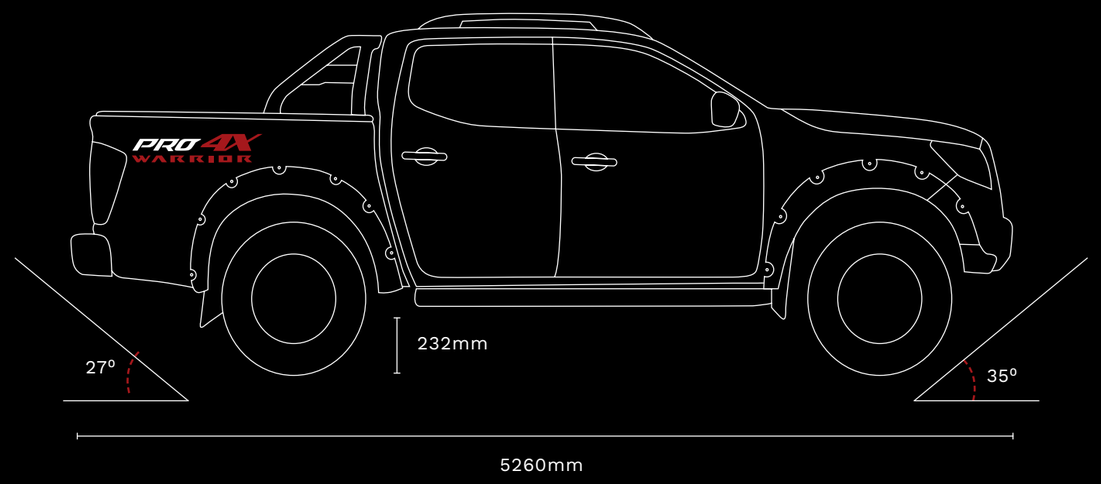

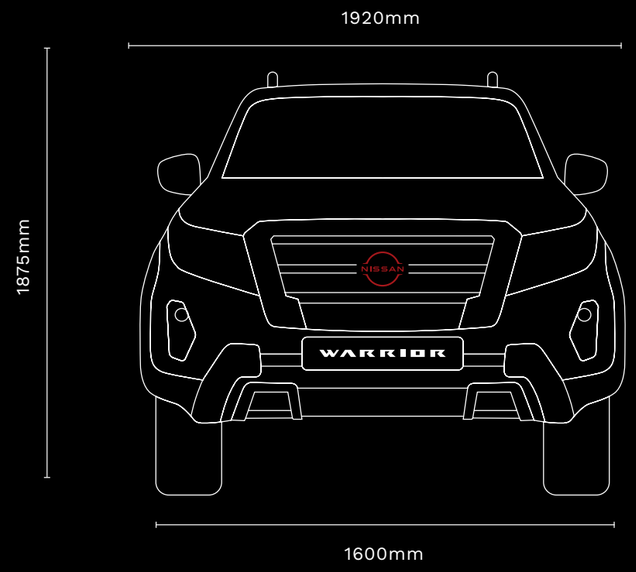

PERFORMANCE ON DEMAND

THE POWER TO KEEP PUSHING FORWARD.

The all-new Navara WARRIOR combines horse power and brain power in a way that gives you the confidence to conquer all rugged terrains, as well as the city streets and wide open roads. Purpose built for unique and unforgiving African conditions, this boldly styled and technologically advanced pickup arrives fully loaded with features to keep you and your loved ones connected, safe and comfortable, no matter where the road takes you.

ULTRA-LOW NVH

Improvements in Noise, Vibration and Harshness translate into a noticeably smoother and more refined on-road driving experience.

Vehicle Dynamic Control (VDC)*

Seven Sensors in the Navara monitor driver inputs and vehicle motion, gently aiding the vehicle's ability to stay on the driver's intended path. Vehicle Dynamic Control helps control and limit both understeer and oversteer, maintains optimum traction and even applies brake pressure to reduce wheel slip on loose road surfaces.

Electronic Brake Force Distribution (EBD) with Braking Assist (BA)

Reduce stopping distances in emergencies by up to 15% with Braking Assist. The Navara detects panic braking and automatically increases pedal pressure for confident, controlled braking to avoid collisions at high speed.

Trailer Stability Assist (TSA)*

New to the Nissan Range and standard across all models, TSA inspires towing confidence by detecting any instability, sway or "fishtailing" in the trailer while driving and quickly brings the trailer back into a safe axis.

HIGH OUTPUT

140kW POWER

450Nm TORQUE

2.5ℓ DDTi Intercooled Turbo Diesel Engine

Efficiency and torque in one capable turbo-charged package. With a quick-shifting 7-speed automatic transmission, you'll have power on command when you load or haul.

BEYOND PREMIUM

WORLD CLASS GRIT, WORLD CLASS COMFORT.

With this much comfort and style, you'll never want to leave. Whether you're clocking up the miles on a long road trip with the family, or doing the every day office city commute, experience perfectly premium in the Navara WARRIOR. Attention to detail abound with upscale accommodations of unique interior trim, special orange-accented logos and stitching of the WARRIOR logo and anodised black panels. Feel relaxed and protected thanks to noise dampening materials in the windshield, dashboard console and floor. Fatigue-reducing Zero Gravity front seats with leather, complete an SUV-like cabin in a pickup, like never before.

FIRST CLASS FOR ALL

IMPRESSIVE FROM EVERY SEAT.

Everyone wins in the Navara WARRIOR. Rear seats provide improved comfort for rear passengers. Higher seat cushions increase the leg room while a rear center armrest with built-in cup holder storage for a mobile phone, add thoughtful conveniences to the comfort. The Navara WARRIOR features rear seat air conditioning ducts and an easy access USB port for the ultimate back seat driver experience.

Noise Reducing Acoustic Glass	Fatigue Reducing Front Seats	Comfort Rear Seating Cushions	8-Way Power Adjustable Drivers Seat	Rear Passenger Air-Conditioner Ducts

Create your ideal climate under any African conditions with Automatic Dual Zone Climate Control.

PRACTICAL & PREMIUM

STEP INTO A CABIN OPTIMISED FOR CONVENIENCE.

Form meets function as you discover how the Navara WARRIOR cabin has been thoughtfully planned out to seamlessly integrate into every moment; be it for work, play or leisure. Generous storage areas, sunglass stowing, an oversized glove box and multiple charging points make the Navara WARRIOR the perfect companion for everyday life.

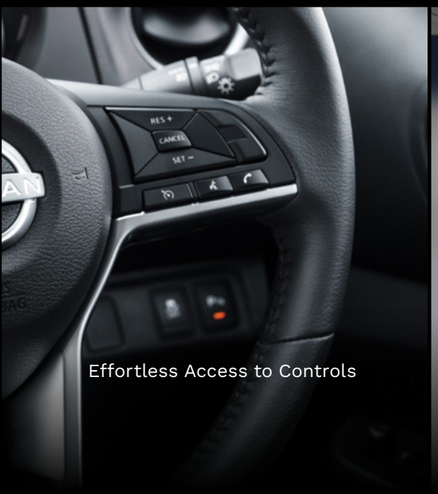

Effortless Access to Controls

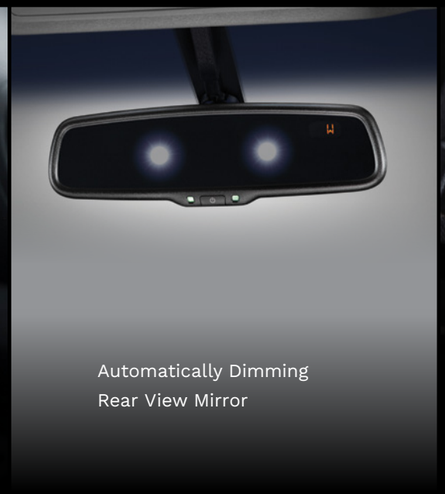

Automatically Dimming Rear View Mirror

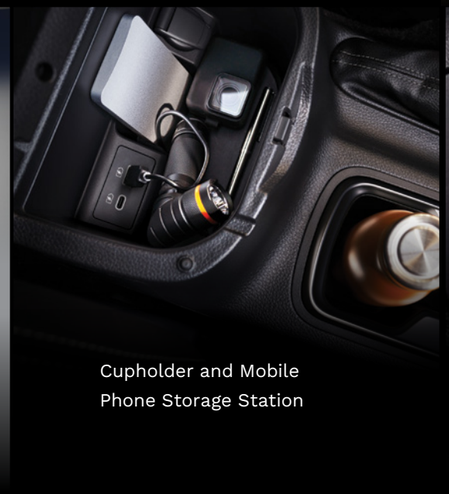

Cupholder and Mobile Phone Storage Station

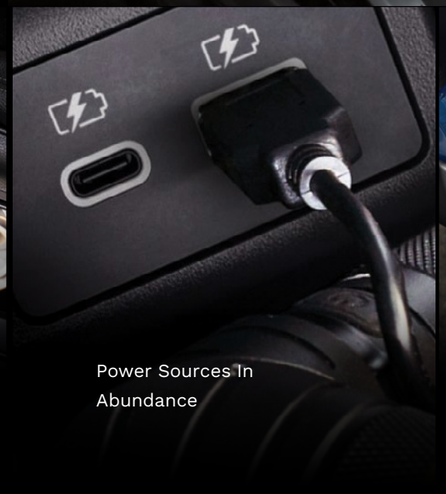

Power Sources In Abundance

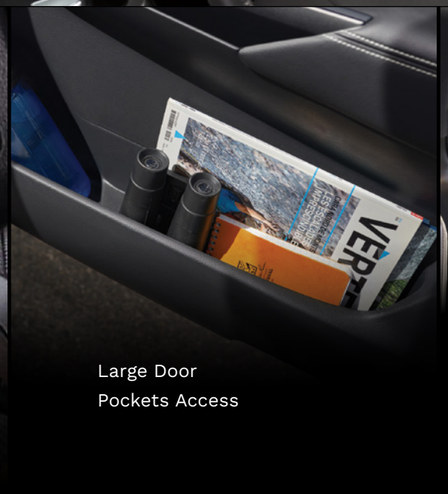

Large Door Pockets Access

Oversized Practical Storage

CONQUERING THE AFRICAN TERRAIN.

AVM WITH OFF-ROAD MODE

On rough terrain, Navara WARRIOR's Intelligent Around View Monitor becomes your extra set of eyes. With a specialized Off-Road Mode activated at slow speeds in 4 LO mode, this advanced driver technology gives you a crystal clear view of the surrounding terrain as you navigate confidently and boldly across any surface type.

AVM WITH MOD

Navara WARRIOR's intelligent cameras are also able to detect moving objects around the vehicle, making it easier and safer to park in tight spaces. Moving Object Detection (MOD) alerts the driver through audible and visual information by displaying a yellow frame where a moving object has been detected, inspiring total driver confidence around every corner.

LEADING DRIVE ANGLES

Generous ground clearance and a wading depth of 600mm means you can keep going when the terrain gets tough. Designed with a superior approach angle of 33o and a departure angle of 27o, tackle steep conditions with the confidence to keep moving forward.

TRAILER HOOK-UP

Having a 360° view is especially useful when connecting to a trailer. Active guidelines help you place your Navara WARRIOR perfectly every time for the perfect trailer hook-up's, especially when there's no one else around to assist.

A BIRD'S EYE VIEW

AROUND VIEW MONITOR.

Experience confidence in the most confined spaces. Around View Monitor technology makes use of four cameras, giving you a complete composite 360° overhead view of every obstacle in your immediate vicinity. Combine that with Navara WARRIOR's efficient steering angles and take on the most challenging tight parking spaces with ease and confidence every time.

Nissan tackles the everyday situations with innovative engineering. The Navara WARRIOR's steering ratios help when changing direction quickly or manoeuvring through tight parking spaces.

ROCK SOLID OFF-ROAD CAPABILITY

ANY TERRAIN. ANY TIME.

Take on the most challenging environments that Africa has to offer with ultimate confidence.The latest in electronic driver technology meets decades of hardworking Nissan pickup heritage to create the toughest Navara WARRIOR ever, purpose built to conquer and built to last. The all-new Navara WARRIOR merges capability and sophistication for you to cruise rolling dunes, tackle river crossings with ease or navigate an extreme rocky trail with rock solid confidence.

ON THE FLY 4X4*

Easily shift from 2WD to 4 High thanks to the Navara WARRIOR's On The Fly 4X4 system. Whether it's 4WD High you need for a bit of light off-roading, or 4WD Low for navigating obstacles, deep sand, snow, or mud it's an easy switch. For every day driving, 2WD mode helps keep your trip more fuel-efficient.

HILL DESCENT CONTROL (HDC)*

Hill Descent Control makes going down steep gradients manageable by automatically adjusting your speed and brake pressure to help keep you safely in control, at a constant speed.

HILL START ASSIST (HSA)*

It's never an uphill battle with Hill Start Assist to prevent from rolling backwards on steep inclines.

KNOWLEDGE IS POWER

ADVANCED DRIVER-ASSIST DISPLAY.

It’s easy to be in control of the situation with Navara’s Advanced Drive-Assist Display. Helping to keep your eyes on the road with less distraction means you’re focused and relaxed, whether you’re off the beaten track or negotiating city traffic. Navara’s ultra-clear 7-inch Advanced Drive-Assist Display puts key information right where you’ll want it. With a quick glance down, you have info on everything from music to key driver aid alerts.

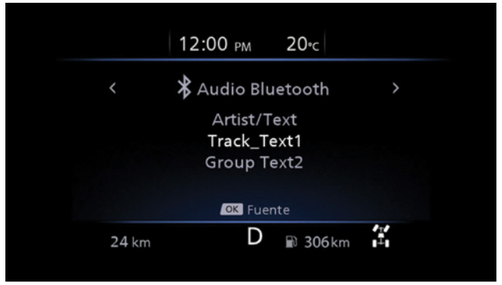

NOTICE, FUEL CONSUMPTION AND EMISSIONS: Quoted fuel consumption and emission values have been established using the prescribed method of measurement (United Nations Economic Commission for Europe “ECE” Regulation R101 in the current version) as required under legislation. The fuel economy information is “ideal world” testing figures, supplied for the purpose of comparison between the various types of vehicles. In “real world” driving conditions, other factors such as driving style, fuel quality, weather, altitude, tyre pressure, etc. can all influence the fuel consumption results for any given vehicle.

INTELLIGENT INTEGRATION

TECH TO CONNECT WITH INTUITIVE INFOTAINMENT.

Seamlessly integrate your digital life with the best Navara ever and bring your world on the road with you, wherever you go.

8-INCH TOUCH-SCREEN INFOTAINMENT
Navara WARRIOR models are equipped with an 8-inch touch-screen display vehicle infotainment.

Works with Apple CarPlay

Equipped with Siri®, Apple CarPlay® brings on board your contacts, favorite audio apps, Apple Maps® and more.

The driver can use the steering wheel controls to adjust volume and toggle through screens.

- Apple CarPlay® can be used by connecting the lightning cable at one of the USB ports to the iPhone.
- The driver can instantly see all the compatible apps on the display screen such as maps, music and podcasts.
- Apple CarPlay® is Plug and Play, which means no additional software is required for your iPhone and all updates reflect in real time for greater convenience.

Works with androidauto

Helps the driver Navigate, Communicate and entertain in the vehicle.

- Android Auto™ automatically provides drivers useful information like suggested destinations, upcoming appointments and weather conditions.
- Google Maps and Waze allows the driver to get real time alerts of traffic conditions, best routes and even petrol stations on the selected route. The hands-free tech gives voice-guided navigation, live traffic information, lane guidance, and warnings to the driver.
- With on-demand access to 40 million songs, Google Play Music allows you to stream virtually endless music and podcasts on the road.
- Google Assistant can read your messages out loud and you can write back by talking. From making calls to using chat apps with just your voice, Android Auto™ makes driving less distracting.

COLOURS

Warrior Grey (PM) - KBY

Infinite Black (S) - KH3

White (S) - QM1

DIMENSIONS

1920mm

5260mm

17” ALLOY WHEELS

BLACK LEATHER SEATS

BODY TYPE	•	DOUBLE CAB
SEATING CAPACITY	•	5
ENGINE	•	DIESEL, COMMON RAIL DIRECT INJECTION, 2488 CC
POWER AND TORQUE	•	DIESEL: 140KW @ 3600 RPM
	•	450NM @ 2000 RPM
TRANSMISSION	•	7 SPEED AUTOMATIC TRANSMISSION
WHEELS	•	17" ALLOY
EXTERIOR	•	BODY COLOUR BUMPERS
	•	BLACK COLOURED MIRRORS
	•	BLACK GRILL
	•	REAR STEP BUMPER
	•	AUTO FOLDING & ELECTRIC ADJUST MIRRORS
	•	BLACK DOOR HANDLES
	•	LED HEADLIGHTS & DAYTIME RUNNING LIGHTS & FOG LAMPS
	•	ROOF RAILS BLACK
	•	2 CHANNEL UTILI-TRACK™ SYSTEM ON LOAD BED

INTERIOR AND CONVENIENCE	•	POWER LEATHER SEATS
	•	8-INCH DISPLAY AUDIO (AM/FM+ RDS + USB + BT + VOICE RECOGNITION + APPLE CARPLAY® + ANDRIOD AUTO™)
	•	6 SPEAKERS
	•	CRUISE CONTROL
	•	AUTO AIR-CONDITIONER
	•	AUTO DIMMING REAR-VIEW MIRROR
	•	INTELLIGENT KEY WITH PUSH START BUTTON
	•	POWER SLIDE REAR SCREEN
SAFETY	•	DUAL FRONT, SIDE, CURTAIN & DRIVER KNEE AIRBAGS
	•	ABS, EBD, BRAKE ASSIST
	•	VEHICLE DYNAMIC CONTROL, HILL START ASSIST & HILL DESCENT CONTROL
	•	TRAILER STABILITY ASSIST
	•	AROUND VIEW MONITOR & MOVING OBJECT DETECTION
	•	SPEED SENSING DOOR LOCK
	•	ISOFIX CHILD SEAT ANCHORAGE

FEATURES AND SPECIFICATIONS ARE SUBJECT TO CHANGE DEPENDING ON MARKET AND GRADE.

SPECIFICATIONS & FEATURES.

NAVARA WARRIOR

ENGINE		
Engine		2.5DDTi High Output
Displacement	cc	2488
Bore and Stroke	mm	89.0 x 100.0
Maximum Power	kW/rpm	140/3600
Maximum Torque	Nm/rpm	450/2000
Fuel Type	0	Diesel
Fuel Tank Capacity	ℓ	80
TRANSMISSION & DRIVE TRAIN		
Transmission		7-Speed Automatic
Driven Wheels		4wd
Rear Limited Slip-Differential		Std
SUSPENSION		
Front Suspension		Independent Double-wishbone + Stabaliser
Rear Suspension		5-Link Coil Spring
WEIGHTS & CAPACITY		
Gross Combination Mass (GCM)	kg	6130
Gross Vehicle Mass (GVM)	kg	3115
Tare Mass	kg	2223
Payload	kg	892
Maximum Towing Capacity Unbraked	kg	750
Maximum Towing Capacity Braked	kg	3500
DIMENSIONS		
Overall Length	mm	5260
Overall Width (excluding mirrors)	mm	1920
Overall Height	mm	1875
Wheelbase	mm	3150
Ground Clearance (to rear axle)	mm	232
Front Track	mm	1600
Rear Track	mm	1600
Front Overhang	mm	885
Rear Overhang	mm	1225
Turning Circle (wall to wall) Dia	m	6,70

Approach Angle	Degrees	35
Departure Angle	Degrees	27
Ramp Break-over Angle	Degrees	24,3
Load Box Length - Top	mm	1471
Load Box Length - Floor	mm	1509
Load Box Width - Top	mm	1492
Load Box Width - Floor	mm	1560
Load Box Width - Between Wheel Arches	mm	1134
Load Box Width - Tailgate Opening	mm	1358
Load Box Height (Front - Rear)	mm	493-500
WHEELS & TYRES		
Wheel Size and Type		17" Alloy
Tyre		LT 275/65/R17 MAXXIS RAZR AT
Spare Wheel		Full size alloy
EXTERIOR		
Grill		Black
Front Bumper		Modified
Rear Bumper		Body Coloured
Side Steps		Black
Over-fender		Black
Wheel Arch Flares		Std
Roof Rails		Black
Door Mirror Finish		Black
Door Mirrors		Power + Auto Fold
Door Handles		Black
Front and Rear Mudflaps		Std
Front Towing Hook		Std
Headlights		LED + Auto + Follow me Home
Fog Lights		Std
Daytime Running Lights		Std
2 Channel Utili-Track™ System		Std
12V Outlet Inside Load Box		Std
Rubberising		Std

Tow-Bar		Accessory Fitted *
Spare Wheel Lock		Accessory Fitted *
Carpet Set		Accessory Fitted *
Sports Bar		Std
COMFORT & CONVENIENCE		
Front Seat Type		"Separate Seat w/ WARRIOR embroided headrests"
Driver Seat Adjustement		8-way Power
Passenger Seat Adjustement		4-way Manual
Seat Upholstery		Leather
12V Outlets Inside Cabin		2
USB Ports (USB-Ax3 & USB-Cx1)		USB-Ax3 & USB-Cx1
Air-Conditioning		Automatic Dual Zone
Rear Air Vents in Centre Console		Std
Power Windows with Driver Auto Up/Down		Std
Rear Screen		Power Sliding
Remote Central Locking		Std
Speed Sensing Auto Door Lock		Std
Intelligent Keyless Entry		Std
Push Button Start		Std
Auto Dimming Rear View Mirror		Std
AUDIO & CONNECTIVITY		
Audio - CD, AM/FM, RDS, Bluetooth® connetivity		Std
NissanConnect with Android Auto & Apple CarPlay		Std
8" Touch Screen Display		Std
Steering Wheel Audio Controls		Std
SAFETY & SECURITY		
Driver and Front Passenger Airbags		Std
Side Airbags		Std
Curtain Airbags		Std
Driver Knee Airbag		Std
ISOFIX Child Seat Anchorage		Std

Anti-theft System (Immobiliser)		Std
Anti-lock Braking System (ABS)		Std
Electronic Brake Force Distribution (EBD)		Std
Brake Assist (BA)		Std
Vehicle Dynamic Control (VDC)		Std
Trailer Stability Assist (TSA)		Std
Hill Start Assist (HSA)		Std
Hill Descent Control (HDC)		Std
Around View Monitor with Moving Object Detection		Std
Reverse Camera and Sensors		Std
Intelligent Emergency Braking		Std
Intelligent Forward Collision Warning		Std
Intelligent Driver Alertness		Std
Blind Sport Warning		Std
Lane Departure Warning		Std
Rear Cross Traffic Alert		Std
High Beam Assist		Std
Cruise Control		Std
Rain-Sensing Wipers		Std
Rear Privacy Glass		Std
SERVICE & WARRANTY		
Service Interval		15,000 km
Service Plan		6 year / 90,000 km
Warranty		6 year / 150,000 km
COLOURS		
White (S)	QM1	•
Infinite Black (S)	KH3	•
Warrior Grey (PM)	KBY	•

NISSAN
WARRIOR

WARRIOR | BY PREMCAR

www.navarawarrior.co.za