UD TRUCKS

Croner

PDE 250

H43

VEHICLE		H43
Model		PDE 250
Manufacturer's code		PDE62RGVW25
Model description		6x2 Freight Carrier
MASS		
Tare – total (T) *	kg	6 580
Tare Frt / Rr	kg	3 300 / 3 280
GVM	kg	25 000
V	kg	24 500
GCM	kg	32 000
D/T	kg	32 000
Axle – front GA/GAU	kg	6 500
Axle – front A/AU	kg	6 500
Axle – rear GA/GAU	kg	19 000
Axle – rear A/AU	kg	18 000
* Tools included in tare		Yes
PERFORMANCE		
Gradeability at V	%	28.09
Gradeability at D/T	%	26.47
Max. geared road speed	km/h	126.9
MAJOR DIMENSIONS		
Overall length	mm	10 109
Overall width	mm	2 486
Wheelbase	mm	5 700
CA – cab to rear axle	mm	4 826
ROH – Centre of rear axle to end of frame	mm	2 945
Turning radius (curb to curb)	mm	9 500
ENGINE		
Model		GH8E
Capacity	cm^3	7 700
Layout		In line six cylinder
Type		Turbo Intercooled (Common Rail)
Power at r/min	Kw	184 @ 2 200
Torque at r/min	Nm	950 @ 1 100 – 1 700
Emissions standard		EUR III
Protection		Standard
TRANSMISSION		
Model		Allison 3000
Shift		Automatic
No. of gears forward		6
First gear ratio		3.49
Top gear ratio		0.65
Transmission PTO		Prepared for PTO fitment

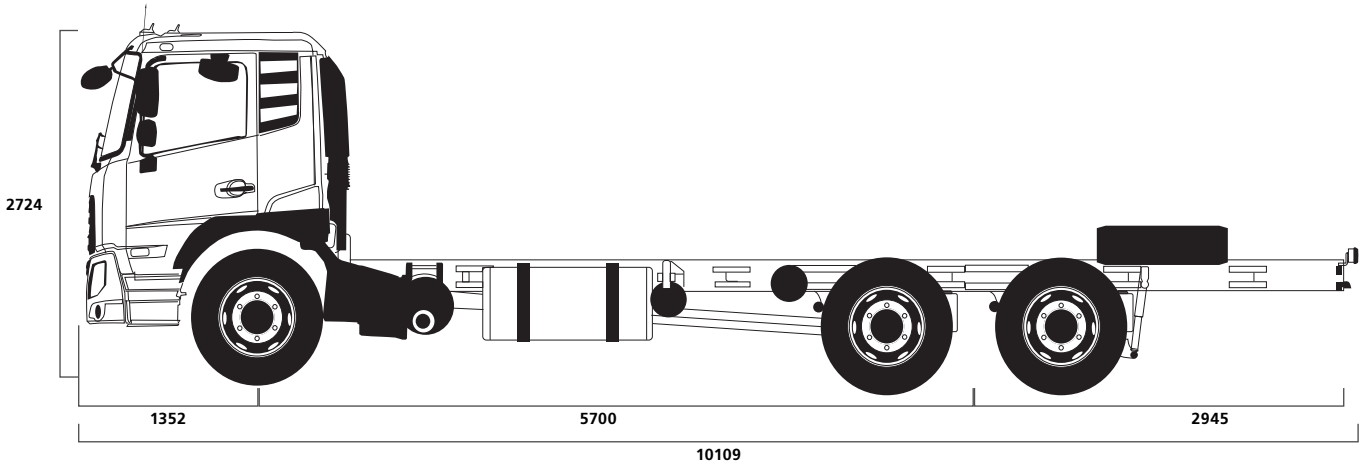

CLUTCH		
Torque converter		TC 418 (1.98:1)
DRIVE AXLE		
Model		RSS1132D
Reduction type		Single Reduction Single
Final ratio		5.57
SUSPENSION		
Front		Parabolic leaf suspension
Rear		Air suspension
Shock absorbers		Standard
Stabilisers		Front Standard
STEERING		
Operation		Power Assisted
Steering Wheel Tilt & Telescopic		Standard
BRAKES		
System type		Full Air
Front		S-cam Drum Brake
Rear		S-cam Drum Brake
Electronic brake system		ABS
Park/emergency system		Spring brakes-rear
Exhaust brake		Standard
ELECTRICAL & FUEL		
Fuel tank 1 capacity	ltrs	315
Fuel tank 2 capacity	ltrs	Without
TIRES		
Size – front		295/80R22.5
Size – rear		295/80R22.5
CAB		
Type		Sleeper Cab
No. of bunks		1
No. of seats		3 (Includes Center Seat)
Window lift		Mechanical/Manual
Seat Belts		Standard – ELR with Reminder (Lap Belt with Center Seat)
Seats		Fully adjustable with arm rest
Air conditioning		Standard
Radio/USB		Standard
On-board computer		Multi Function Display & In Vehicle Diagnostics
Tilt cab		Mechanical
Speed limiter	km/h	80
Day Time Running Lights		Without
Rear View Mirrors		6 total (Front and LHS close proximity, rear and wide angle RHS & LHS)
12 Volt Power Outlet		Standard in Dash
Overhead Storage Console		Cab front Upper Storage
Driver Fuel Coaching Tool		Standard in Multi Function Display
Telematics Communication Gateway		Gateway with 3G and WLAN

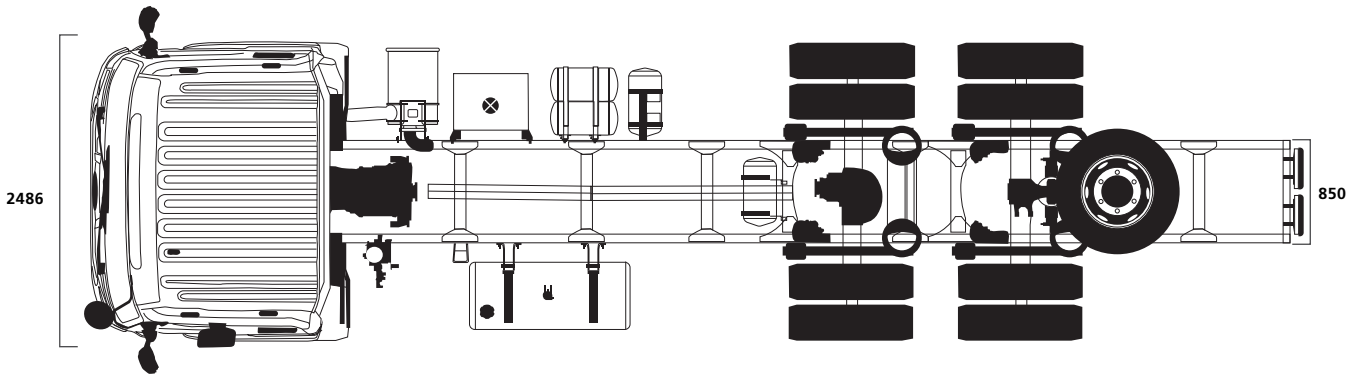

Specifications and options may differ depending on each country due to regulations or special requirements.
Dimensions and devices may be changed without prior notice. Please contact your nearest UD Trucks dealer for further details.