UD TRUCKS

THE NEW

Kuzer

Made To Deliver Extra

Going the Extra Mile

Tight manoeuvring in tough situations. Squeezing through rush hour to make your next delivery. Is this your daily routine in a nutshell? Then step inside the Kuzer. The truck that fits your life.

A light medium duty truck for easy urban driving, the young pretender in the UD family rolls out Flexibility, Productivity, Uptime and Fuel Efficiency, and places it firmly where you and your business need it. And with a cab that maxes out on comfort, this is somewhere you could definitely learn to call home. Okay then, your mobile office will do.

So what's actually unique about the Kuzer? Well, it so happens that we built it specifically for the tight streets of inner cities like Jakarta. Our latest creation is a further milestone in UD Trucks' history of renowned and innovative Japanese technology. Combining a powerful and durable new generation CRS engine with an agile and practical design means performance and manoeuvrabzility unheard of in a truck this size.

Throw in cost-cutting fuel efficiency controls and you're looking at the perfect future investment. Whichever way you turn.

Light-medium duty just got real. It's the new Kuzer. Made to deliver extra.

The best partners are flexible.

Jakarta is a vast, beautiful and hectic city. As a professional driver struggling through narrow, busy streets every day, your story is both universal and unique. Ever wondered how much time could you save by investing in a more agile, easily navigable partner? Meet the Kuzer.

Made to deliver extra
We'll spare you the buzzwords when describing the latest Japanese technology that has gone into developing this truck. All we will mention is that it has launched something very special into the market that delivers extra whenever you need it. A flexible first for urban distribution.

The Kuzer makes the perfect partner for urban distribution. It delivers reliability and durability, power and performance, comfort, and fuel efficiency. A compact, practical design conquers tight bends with ease. Keep mobile and on-call. Make your workspace work for you.

From A to B made easy
Built to beat tight city traffic, the Kuzer is a serious asset in any situation. Sure, there's a lot out there that's beyond your control. We just want to keep you moving efficiently from assignment to assignment, helping you join the dots in your busy schedule.

Your workspace. Your way.
Taking your work home with you. Sure it might not sound so appealing. Yet with the Kuzer, the line between business and pleasure becomes blurred. Take care of some paper-work, maybe catch up with your social media feeds, or just kick back with a coffee and your favourite sounds.

In a class of one.

What makes your business unique? When days are busy and margins are tight, taking productivity to the next level can set you apart from the rest. By matching an engine this powerful with a cab this comfortable, the Kuzer has created a totally new product category. Its own.

Hotwire your business
Make more impact per kilometre thanks to superior power and performance. Driving is made easier on rough or steep terrain, while higher maximum speed is yours when you need it. Add to this enhanced fuel efficiency, which boosts that bottom line on every trip you take. *See pages 14–15 for more details.*

Streetwise staying power
Long hours at the wheel take their toll. That's why the Kuzer is equipped with a series of systems to reduce fatigue and increase driver comfort. Less gear shifting effort and easy steering with minimal movement let you concentrate on doing what you do best, for longer. *See pages 16–17 for more details.*

Making the routine profitable
Don't you just love routine? Where's the drama in making the same journeys day-in, day-out? We can't promise you'll be on the edge of your seat all day, but the Kuzer's spacious cab and easy driveability will make regular routes a quicker, easier and more highly productive pleasure.

A new generation 3.8L CRS engine offers superior power and performance. Better stability achieved via wider chassis frame. Six-speed overdrive gearbox provides higher maximum speed. Driver comfort enhanced by easy steering. Kuzer drive-ability makes every journey a pleasure.

Fast-forward your day.

The customer always comes first. True, but most days you just want to get the job done and get home. Your customers are no different. Fitting more into your schedule by keeping your truck on the road is a major win-win for all involved. Then there's your profitability to consider…

Take on the System
Of course it's obvious, but a durable and reliable engine is a key factor in securing maximum uptime. A new generation CRS engine is robust and flexible, delivering high power and torque. OBD with guided tools and CAN-based communication facilitate the transfer of diagnostic information. Modern 3.0 Engine Management System makes serviceability simpler and uptime easier to maximize.

Advance technology CRS engine system delivers on this promise, even when regularly pushed to its limits.

Making the most of…
…your possibilities. Whether you're operating one truck or one thousand, uptime means increased productivity, profitability and future opportunities. Advanced UD onboard diagnostics allow our technicians to stay bang up to date with the health of your vehicle.

Easy serviceability. No biggie.
Don't stress yourself out in the event of a standstill. UD Trucks Mobile Workshop supports your business by bringing our truck expertise to your location if you need it. No big deal, and all part of the service.

Sustainability. The struggle is real.

Investing in a more fuel-efficient truck these days is a no-brainer. With international laws demanding ever-tighter controls on freight transport, and city authorities looking at ways of cutting diesel emissions, sustainability has to be a top priority for any forward-thinking business. Enter the Kuzer.

Breathe more easily than the competition
With optimized engine for better fuel efficiency, you're dealing with a light medium duty truck that is the envy of its competitors. As the transport market in Indonesia moves steadily towards sustainability, taking a positive step for the future of your business – and the planet – makes total sense.

Fuel-friendly features
The Kuzer packs a load of innovative fuel-efficient functions into a stylish format. An aerodynamically designed cab facilitates lower fuel consumption, while a smart instrument cluster allows you to hone your driving skills to benefit your pocket. Simple sums that add up to a tidy profit.

Get ready for the win
During trials, the Kuzer delivered better fuel efficiency than other light-medium duty trucks on the market. Optimized gear ratios and an advanced fuel injection system utilize the latest Japanese technology and make for a smart and innovative business investment.

Optimized engine and gear ratios deliver greater fuel efficiency. Aerodynamic cab design means lower fuel consumption. More cost-efficient journeys possible via innovative fuel coaching controls. The Kuzer was a top performer in recent fuel efficiency trials.

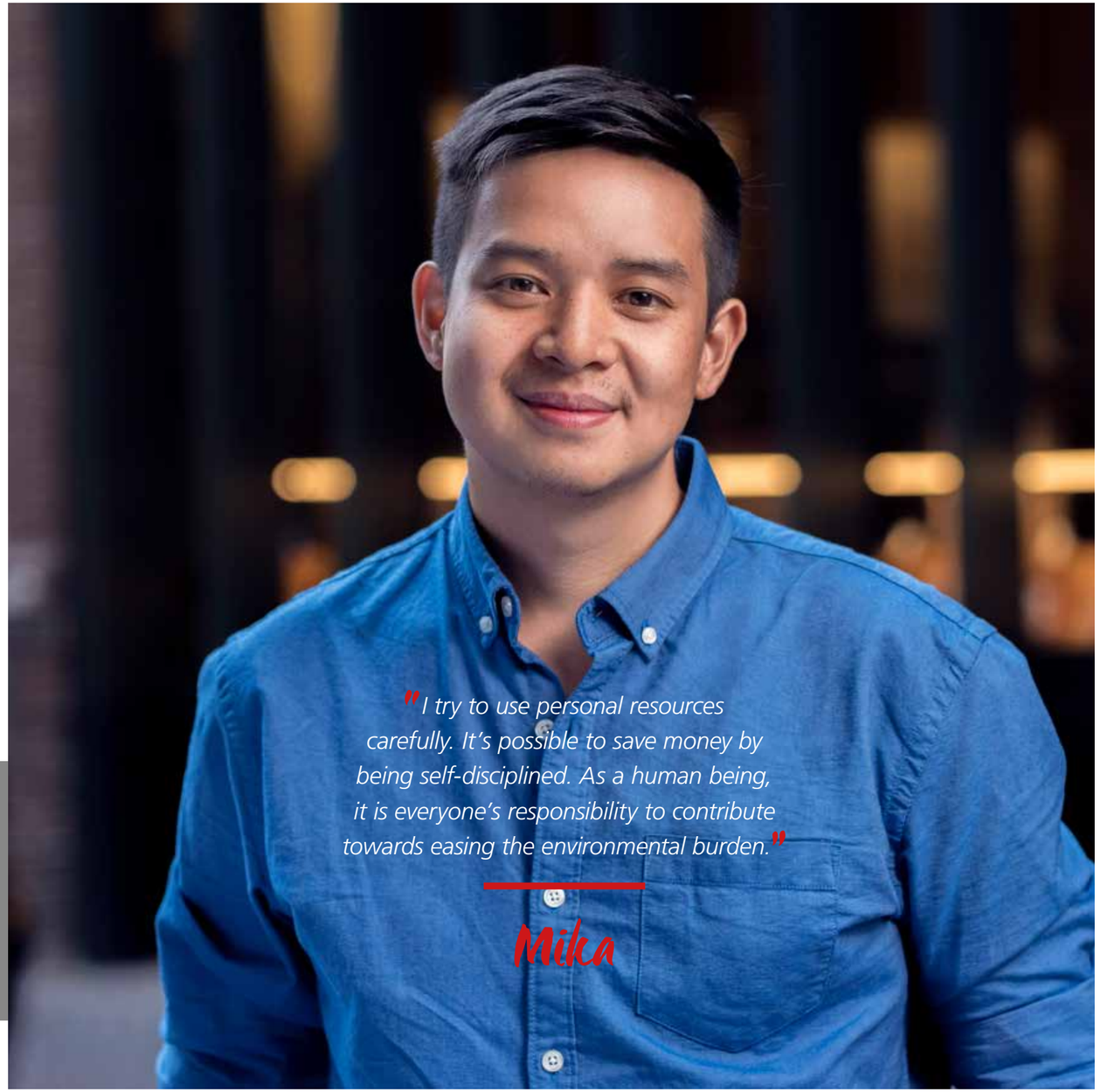

Making the right turn.

The Kuzer is set to revolutionize our customers' day-to-day business. Here's a summary of the key benefits that make it the perfect light-medium duty truck for modern city distribution.

- Excellent distribution possibilities
- Faster and easier journeys every day
- Improved power and performance
- Less driver fatigue via enhanced ergonomics
- A more fuel-efficient future
- More cab space for work and leisure
- Deliver in comfort and style
- Durable + Reliable = long life
- Easy serviceability via state-of-the-art diagnostics
- Tested to improve driver and passenger safety
- A flexible fit for urban driving
- Unique UD service benefits

Changing the game.

One of a kind. Delivering matchless power and fuel-efficiency up front. UD Trucks Kuzer RKE 150 sets the benchmark higher within the city distribution sector. So what's under the hood?

Power for a new generation.

More than a steady performer
The New generation Advance technology 3.8 litre CRS engine – features a world class 3.0 Engine Management System. Highly reliable and durable, it is perfectly matched to the distribution sector with its frequent stops, and offers a host of business benefits.

- Access to Volvo Group electronic platform improves your competitive position through business improvement and efficiency
- Optimized engine delivers higher RPM than a normal two-valve engine, enabling better engine breathing and fuel savings
- High power and torque guarantees power and control in rough and steep road conditions
- Faster response, easy serviceability and maximized uptime are all possible via connected OBS technology
- Advanced fuel injection system for reduced environmental impact
- Highly reliable and durable engine

Shifting fatigue
With transmission developed for high maximum speed and smooth gear-shifting, a 6 speed gearbox reduces driver fatigue via its subtle functionality. Optimized gear ratios result in better transfer of torque in every gear, which when coupled with the overall vehicle system, help to deliver improved torque to the wheels.

Structured for success
The Kuzer's incredible durability is partly achieved by a modular DOMEX chassis with a high strength wider frame that carries less weight. This also facilities better stability when you need to put your foot down.

Your workspace. To the max.

Renowned Japanese design
Attention to detail. Less-is-more. Call it what you will, this truck's exterior creates a lasting first impression. A new front design and headlamp mounted bumper offer a lively, fresh look for the street, with stylish integrated headlamps complementing the aesthetic from any angle.

The best seat. No matter the view
A six-way adjustable driver seat means you can easily find the driving posture that works for you. This sharpens focus and leaves you feeling less tired and stressed. Increased visibility via seat height adjustment leads to a safer and more enjoyable drive.

Toshio Shiratori,
Design Director UD Trucks

For work and play
Storage options and home comforts are plentiful. Keep documents and other valuable items in the lockable glove box. There's a bottle holder on the back of the driver's seat, and a Can and Card holder in the dashboard. A stylish room lamp and an inbuilt music system supply a warmer quality of light and a vast array of sound options. So you can bring the party when it suits.

Step up
Getting in and out of your cab so often eats up energy you should be using on faster pick-ups and turnarounds. That's why wide door opening and B-pillar grab handles allow for sweat-free entry and exit. A lower foot-step makes for effortless cab entry regardless of height.

Tight turning made simple
Some drivers relish the challenge of narrow city streets. Whatever your view, you'll want the right tools to tackle them. A Polyurethane soft-touch steering wheel facilitates a more comfortable grip, and an ergonomically designed gear lever takes the strain off regular shifting. The steering wheel is also tiltable and telescopic, meaning less muscle use during awkward manoeuvring.

Safety. Built-in and tested
It goes without saying that we've tested both cab and truck to its limits to ensure the best possible safety. As with all our vehicles, UD Trucks' goal of 'safety that puts people first' was foremost in our thinking when developing the Kuzer.

Important and innovative safety include.

Dual panel cab – more robust than normal single panel cab

Clutch pedal footrest – offering reduced driver fatigue

Butterfly quarter glass – better ventilation increases alertness

Wide angle outer rear-view mirror – for improved traffic observation

3 point ELR seat belt – with additional belts for co-driver

Integrated headlamps – for increased visibility

Knee cover guard – better collision safety for driver and passengers

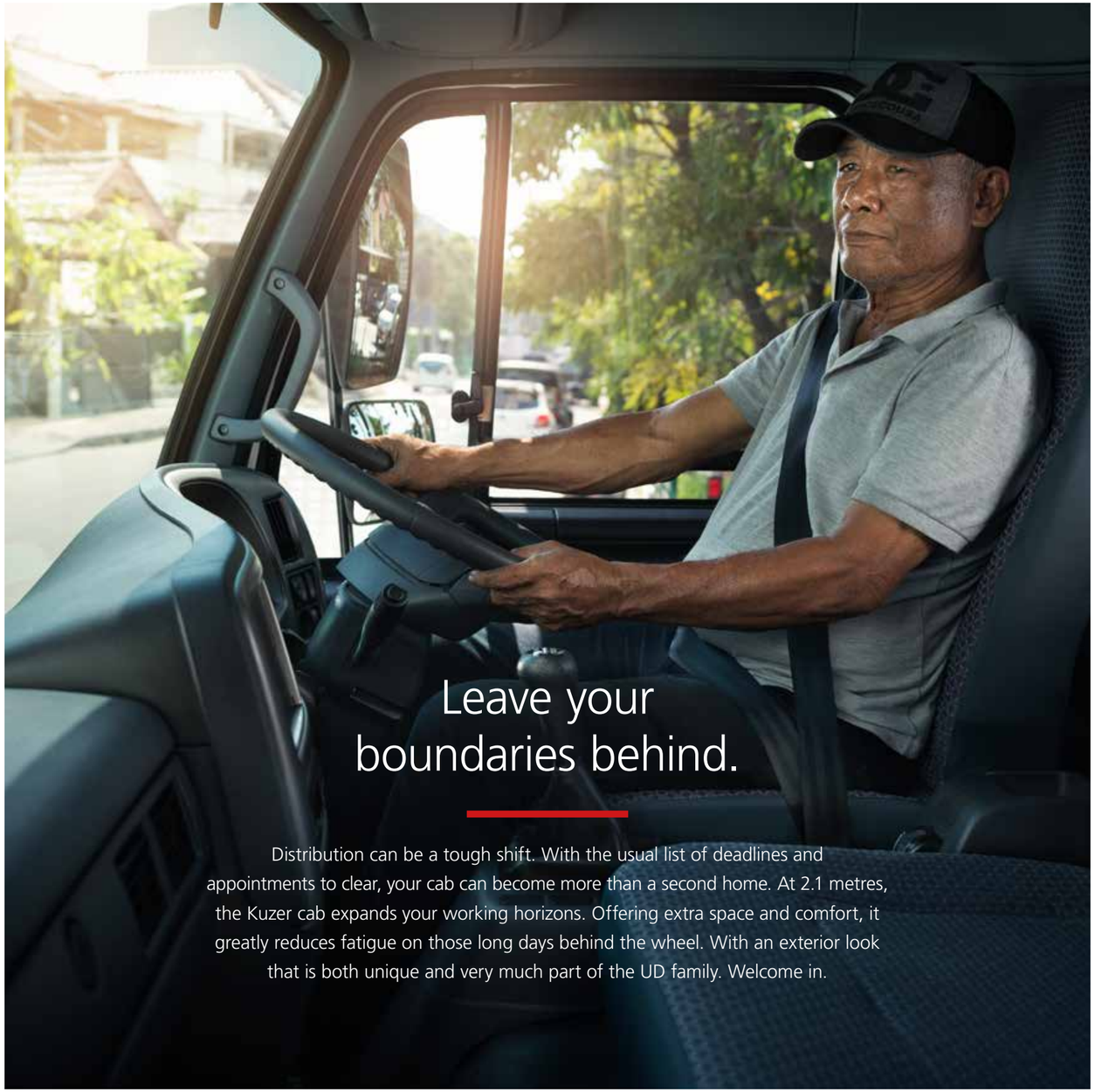

Leave your boundaries behind.

Distribution can be a tough shift. With the usual list of deadlines and appointments to clear, your cab can become more than a second home. At 2.1 metres, the Kuzer cab expands your working horizons. Offering extra space and comfort, it greatly reduces fatigue on those long days behind the wheel. With an exterior look that is both unique and very much part of the UD family. Welcome in.

Taking care of business.

So we've told you what the Kuzer can do for your distribution. However the latest Japanese technology that makes it unique is not only present in the truck itself. It's an essential part of UD Extra Mile Support. As your flexible business partner, we provide access to the most up-to-date UD special workshop tools, diagnostic equipment and UD Genuine Parts when you need it. Maximising your uptime, and keeping your investment profitable and secure.

At your service every hour.

UD Genuine Service
Nobody knows your trucks better than our highly skilled UD mechanics and service teams. At UD Trucks workshops, special tools, diagnostic equipment and access to top quality UD Genuine Parts keep your trucks in optimum condition.

UD Genuine Parts
Designed and tested to provide the highest quality and durability. With a one-year warranty, your business can get set for increased uptime and lower cost per kilometre.

UD Trust (Service Agreement)
UD Trust is all about maximizing your profits and keeping your fleet on the road. Three levels of service care are available: UD Trust Standard, UD Trust Extra, and UD Trust Ultimate. With these three levels, full transparency, no surprises with unplanned repair expenses, and less administration are guaranteed.

UD Telematics Services
UD Telematics Services is a high-tech wireless communications system designed to help you manage your fleet effectively, keeping wheels turning while reducing operational costs.

UD Mobile Workshop
Just let us know when suits and UD Mobile Workshop will come to you. With no need to send trucks off-site for maintenance, you can save time and money, and focus on growing your business.

UD Road Support
Unexpected breakdowns are a pain in the pocket. That's why our fast and efficient UD Road Support team is just a phone call away, providing repair services at your convenience to get you back on the road as fast as possible.

UD Telematics Service
Four key features, multiple benefits: Track and Trace; Fuel Utilization; Fuel Loss Alert; UD Proactive Support.

UD Mobile Workshop
- Book an appointment with your nearest UD workshop
- We service your truck at a time and place that suits you
- Pay seamlessly upon receiving your invoice

UD Road Support
- Dial the UD Road Support service hotline
- UD Service Vehicles visit breakdown site
- Receive a maintenance report and invoice

Technical specifications: RKE150 42R (4×2 Rigid Truck with GH4E 150 Engine)

ENGINE	
Make & model:	UD GH4E 150
Type:	4 cylinder inline, overhead camshaft, common rail injection system, water cooled, turbocharged with intercooler
Emission norm:	Euro III
Bore × Stroke:	100 mm × 120 mm
Total piston displacement:	3,760 cc
Max output:	150 PS (110 kW) @ 2,800 rpm
Max. Torque:	490 Nm @ 1,400–1,800 rpm
Compression ratio:	17.5:1
Lubrication system:	Forced feed lubrication system with filters
Air cleaner:	Double stage paper element

CLUTCH	
Type:	Ceramic facing with clutch booster
Plate diameter:	330 mm

GEARBOX	
Make & model:	UD STO0506-1
Type:	6 speed direct drive type
Gear ratios:	1st – 6,38; 2nd – 3,54; 3rd – 2,09; 4th – 1,38; 5th – 1,00; 6th – 0,77; Reverse – 6,38

FINAL DRIVE	
Type:	UD single reduction axle, hypoid gear type
Final ratio:	4,80

CHASSIS	
Chassis frame type:	High tensile steel, ladder type
Chassis frame dimension:	210 mm × 76 mm × 5 mm
Chassis frame reinforcement:	None
Steering:	Recirculating ball screw type with hydraulic power assistance, adjustable tilt/telescopic

WEIGHTS (kgs)	WB3350	WB3850
Kerb Weight:	3,210	3,230
Front axle:	2,750	2,750
Rear axle:	5,750	5,750
GVW:	8,500	8,500

PERFORMANCE*	WB3350	WB3850
Min. Turning Radius:	5,75 m	7,00 m
Max. Speed:	100 km	
Gradeability:	40,8%	

*Based on theoretical calculations. Actual performance depends on various parameters like actual load,road dulation and conditions, driver, condition of vehicles, etc.

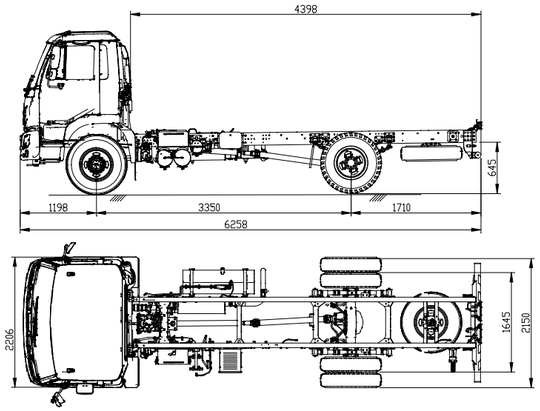

DIMENSIONS (mm)	WB3350	WB3850
Wheelbase (WB):	3,350	3,850
Overall Length (OL):	6,258	7,153
Overall Width (OW):	2,206	2,206
Front Overhang (FOH):	1,198	1,198
Rear Overhang (ROH):	1,710	2,105
Ground Clearance:	180	180

SUSPENSION	
Front:	Semi elliptical leaf spring
Leaf Qty:	8
Shock absorber:	Double acting
Rear:	Semi elliptical leaf spring
Leaf Qty:	Main leaf – 9. Helper leaf – 8
Shock absorber:	Double acting

BRAKES	
Type:	Dual Circuit Fully Air Brakes

WHEELS AND TYRES	
Front:	7.5×16 – 14 PR RIB resp.
Rear:	7.5×16 – 14 PR RIB resp.
Wheel rim:	6×16"
Stud bolt:	6 nos

FUEL TANK	
Fuel tank capacity:	100 litre steel tank mounted on RHS of vehicle – lockable cap

ELECTRICAL EQUIPMENT	
Battery capacity:	100 Ah; 2×12v types
Alternator:	24 volts, 75 amperes
Headlamps & foglamps:	Halogen headlights Auxiliary white colour foglamps as standard

CAB	
Type:	Forward control, all steel welded contruction, tilting cab
Cab features:	Aerodynamic design; composite material bumper with front underrun protection system; manual cab tilting
Cab colours:	Crimson Red

OTHER FEATURES	
Cruise control:	Standard
Fuel coaching system:	Standard
Telematic:	Option
Air conditioning system:	Option

INFORMATION ABOUT LOCAL DEALERS

Article Number #2018XXXXX_XXXXXXX-XX-XX
Printed in XXXXXX.
© Copyright UD Trucks 2018. All rights reserved.
Please note that equipment shown may be optional and may vary from one country to another. We retain the right to alter product specification without prior notification.

UD
Kuzer
UD TRUCKS
Kuzer

UD TRUCKS

Article Number 2018XXXXX-ENG. Printed in XXXXXX. © Copyright UD Trucks 2018. All rights reserved.
Please note that equipment shown may be optional and may vary from one country to another.
We retain the right to alter product specification without prior notification.

UD Trucks Corporation

xx xxxxx xxxx xxxxx xxx

udtrucks.com